komfovent

VERSO STANDARD

USER MANUAL

en

en

CONTENT

1. INTRODUCTION 4

1.1. Before turning on the unit 4

2. AIR HANDLING UNIT FUNCTIONS 5

2.1. Ventilation modes 5

2.2. Air flow control 5

2.3. Temperature control 5

2.4. Air Quality Control (AQC) 6

2.5. Outdoor compensated ventilation (OCV) 6

2.6. Minimum temperature control function (MTC) 6

2.7. Operation on demand (OOD) 6

2.8. Summer night cooling function (SNC) 7

2.9. Override (OVR) 7

2.10. Protective functions 7

3. OPTIONAL FUNCTIONS 8

3.1. Humidity control function (HUM) 8

3.2. Additional zone control (ZN) 8

3.3. Multi-level frost prevention 9

3.4. Combined water heater/cooler 9

3.5. Control of direct evaporation (DX) devices 9

3.6. Water flow monitoring function 10

3.7. External pressure manometers for monitoring filter contamination 10

4. CONTROL AND SETTINGS. CONTROL PANEL C5.1 10

4.1. Parameter overview 12

4.2. Turning on and selection of ventilation modes 12

4.2.1. Calibration of the CF heat exchanger during commissioning 13

4.3. Setting parameters of ventilation modes 13

4.4. Scheduling window and ventilation schedule settings 14

4.5. Overview window 15

4.6. Functions 16

4.7. Settings 19

4.7.1. Air handling unit 19

4.7.2. Customization 21

5. CONTROL AND SETTINGS. COMPUTER 22

5.1. Modes 22

5.1.1. Operation modes 23

5.1.2. Flow control modes 23

5.1.3. Temperature control modes 23

5.2. Functions 24

5.2.1. Air quality control (AQC) 24

5.2.2. Outdoor compensated ventilation (OCV) 24

5.2.3. Minimum temperature control (MTC) 24

5.2.4. Summer night cooling (SNC) 24

5.2.5. Override function (OVR) 25

5.2.6. Operation on demand (OOD) ... 25
5.2.7. Humidity control (HUM) ... 25
5.2.8. Additional zone control (ZN) ... 25
5.2.9. Water heater/cooler ... 26
5.3. Alarms/Status ... 26
5.3.1. Actual alarms ... 26
5.3.2. Alarm history ... 26
5.3.3. Operation counters ... 26
5.3.4. Efficiency status ... 27
5.3.5. VAV status ... 27
5.3.6. Controller status ... 27
5.4. Scheduling ... 28
5.4.1. Operation program ... 28
5.4.2. Holidays ... 28
5.5. Settings ... 28
5.5.1. Date/time ... 28
5.5.2. Connectivity ... 29
5.5.3. User interface ... 29
5.5.4. Log-in password ... 29
5.5.5. Restoring factory settings ... 29
6. CONTROL VIA A SMARTPHONE ... 30
7. PERIODIC MAINTENANCE ... 31
7.1. Housing ... 32
7.2. Filters ... 32
7.3. Fans ... 33
7.4. Rotary heat exchanger ... 33
7.5. Counter-flow heat exchanger ... 33
7.6. Water heater/cooler ... 33
7.7. Direct evaporation cooler/heater (DX) ... 33
7.8. Electrical heater ... 33
7.1. Housing ... 32
7.2. Filters ... 32
7.3. Fans ... 33
7.4. Rotary heat exchanger ... 33
7.5. Counter-flow heat exchanger ... 33
7.6. Water heater/cooler ... 33
7.7. Direct evaporation cooler/heater (DX) ... 33
7.8. Electrical heater ... 33
8. TROUBLESHOOTING ... 34
APENDIX 1. FILTER INSPECTION AND REPLACEMENT ... 37
APENDIX 2. WARRANTY INFORMATION ... 46

1. INTRODUCTION

An air handling unit is a device designed to ensure good ventilation in the premises. An air handling unit removes indoor air containing carbon dioxide, various allergens or dust and replaces it with filtered fresh outdoor air. VERSO Standard air handling units are intended for ventilation of medium-sized spaces (eg. single family houses, offices, etc.), having operating ambient temperature and relative humidity. As standard, the unit is designed for indoor placement. These air handling units are not intended for air flows containing solid particles. As the outside air is usually colder or warmer than the indoor air, an integrated recuperator (heat exchanger) is used to recover thermal energy from the indoor air and transfer the majority of it to the supplied air. If a heat exchanger alone is not capable of reaching a desired temperature, heaters or coolers can be additionally activated.[1]

- **Heat exchangers and heaters (or coolers) are designed to compensate for heat/cool losses during ventilation, therefore, we do not recommend using this unit as the main heating/cooling source. The unit may fail to reach the user-defined supply air temperature when the actual room temperature significantly differs from the desired room temperature. This condition results in inefficient operation of the heat exchanger.**
- **We recommend keeping your air handling unit turned on at all times; when ventilation is not necessary, switch the unit to the minimum intensity operation (20 %). This will help to ensure good indoor climatic conditions and will reduce condensation inside the unit that can cause failure in electronic components.**
- **VERSO Standard air handling units are not intended for operation in areas with potentially explosive atmospheres. Air handling units are not intended for ventilation and dehumidification of wet premises (pools, saunas, car washes, etc.).**
- **When the AHU is installed in a room with high humidity level, condensate may form on the walls of the unit at low outdoor temperatures.**

This symbol indicates that this product may not be disposed of with your household waste as specified in the WEEE Directive (2002/96/EC) and national laws. This product should be handed over to a designated collection point or to an authorised collection site for recycling electrical and electronic equipment (EEE) waste. Improper handling of this type of waste could have a negative impact on the environment and human health due to potentially hazardous substances that are generally associated with electrical and electronic equipment. At the same time, your cooperation in the correct disposal of this product will contribute to the effective usage of natural resources. For more information about where you can drop off your waste for further recycling, contact your city authorities, waste management organisations, approved WEEE scheme or your household waste disposal service.

1.1. Before turning on the unit

Before turning on the unit, make sure that:

- The unit is installed in a designated location, all ducts and wires are connected, and sections are tightly interconnected.
- There are no foreign objects, debris or tools inside the unit.
- All air filters are installed.
- Condensate drainage is connected (if necessary) and siphons are filled with water.
- All doors are closed and/or locked and all protective caps are screwed on.

- **The operation, maintenance or repair of the air handling unit is prohibited for people (including children) with mental, physical or sensory disabilities, as well as for persons without sufficient experience and knowledge, unless supervised and instructed by the person responsible for their safety in accordance with these instructions.**
- **Do not operate the unit connected to a temporary power supply as unstable power supply can damage electronic components.**
- **The air handling unit shall not be turned on without installed and connected protective earthing.**

In case of any doubts, contact your installer or “Komfovent” representative to make sure that the unit is operational.

[1] Depends on the unit components.

UAB KOMFOVENT we reserve the right to make changes without prior notice

2. AIR HANDLING UNIT FUNCTIONS

Operation algorithms and functions of the air handling unit are controlled by an integrated automation system. The air handling unit operates in a user-selected ventilation mode, using additional functions to adjust fan speed and/or power of heaters/coolers. Automation system also continuously monitors various parameters to ensure proper operation of individual protective guards: when these parameters go out of range, error messages are displayed or the unit is stopped.

If the unit is supplied without a factory-installed automation system, the company that installed the automation system shall be responsible for operation of the unit and reliability of protective guards.

2.1. Ventilation modes

The unit operates in one of the available ventilation modes. Air volume for each fan and desired air temperature can be set individually for each mode. The unit comes with the following preset ventilation modes that may be used immediately after installation or, if required, after altering ventilation settings:

- **COMFORT 1** – maximum ventilation intensity (100%), desired air temperature – 21°C.
- **COMFORT 2** – average ventilation intensity (50%), desired air temperature – 21°C.
- **ECONOMY 1** – low ventilation intensity (33%), desired air temperature – 20°C.
- **ECONOMY 2** – minimum ventilation intensity (20%), desired air temperature – 19°C.
- **SPECIAL** – maximum ventilation intensity (100%), desired air temperature – 21°C. This ventilation mode may also be used to block heating/cooling and other functions.

  For information on how to select a ventilation mode and change parameters see Chapter "Control and Settings".

2.2. Air flow control

Fan speed of AHU is adjusted by the selected air flow control method:

- **CAV** – constant air volume control. Fan speed is adjusted by measuring air flow and comparing it against the set value. Fan rotates at a speed required to reach the set air volume, regardless of pressure changes. For example, when air filters get contaminated, fan speed is automatically increased to ensure the same volume of air as during operation with clean filters. In operating modes the user can set the desired air volume for each fan separately. Air volume is set and measured in m^3/h, m^3/s or l/s.
- **VAV** – variable air volume control mode. This method allows maintaining constant air pressure in ducts and adjusting fan speed according to pressure changes in the ventilation system. Air pressure in ducts is measured with optional VAV pressure sensors installed in supply and extract air ducts and connected to B6 and B7 terminals of the main controller (see "Installation Manual"). The user sets a desired air pressure value for the supplied and extracted air flows separately in operating modes. Air pressure is set and measured in Pa. For proper activation of this function please see the "VAV Function Installation Instruction".
- **DCV** – direct air volume control mode. This mode is very similar to the CAV mode, but additionally allows adjustment of fan speed by connecting 0..10 V control signal to terminals B6 and B7 of the main board (see "Installation Manual"). As the control signal voltage changes, fan speed is adjusted accordingly, i.e. 10V corresponds to the set air volume value, whereas, 2V corresponds to 20% of the fan power.

VAV or DCV air flow control method requires additional air duct equipment, therefore, use these functions only after consulting the installer or other qualified professional.

For information on how to select an air flow control method see Chapter "Control and Settings".

2.3. Temperature control

Temperature in the air handling unit is maintained by measuring the actual temperature and comparing it against the user-defined temperature. Then, depending on whether the supplied air requires heating or cooling, heat exchanger or additional heaters/coolers are activated. Available temperature control methods:

- **Supply air temperature control** – the unit supplies air of user-defined temperature.
- **Extract air temperature control** – the unit automatically selects the temperature of supplied air to ensure that the temperature of extracted air is reached and maintained as quickly as possible. Room air temperature is measured by an integrated exhaust air temperature sensor.
- **Room temperature control** – the unit automatically selects the temperature of supplied air to ensure that the room temperature is reached and maintained as quickly as possible; room temperature is measured by an optional sensor (0..10 V signal corresponds to the range of 0..50 °C). Room temperature control function will only be available if none of the following functions is activated at the same time: AQC, OOD.
- **Balance** – supplied air temperature will be maintained to be the same as extracted air temperature, therefore, selecting a desired temperature in the ventilation mode settings is not possible. Room air temperature is measured by an integrated exhaust air temperature sensor.

  For information on how to select a temperature control method see Chapter "Control and Settings".

2.4. Air Quality Control (AQC)

Air quality control function is intended for adjusting ventilation intensity according to the indoor air quality. When indoor air quality drops below the user-defined limit, ventilation intensity is gradually increased until the air quality improves. This function requires an air quality sensor installed inside the extraction air duct or inside the room (see "Installation Manual").

Air quality may be controlled by one of the following sensors (type of the sensor is selected during ordering or set in the control panel menu item "Settings"):

- Carbon dioxide CO_2.
- Air quality VOCq, where maximum signal corresponds to good air quality.
- Air quality VOCp, where minimum signal corresponds to good air quality.
- Relative humidity RH.
- Temperature TMP.

AQC function is blocked if any of the following functions are activated at the same time: SNC, MTC, OCV.

For information on how to activate this function and set a maintained air quality value see Chapter "Control and Settings".

2.5. Outdoor compensated ventilation (OCV)

This function adjusts ventilation intensity according to the outdoor temperature. This saves the energy needed for air heating or cooling. The user sets four outdoor temperatures (two for winter and two for summer) for this function to operate. As long as the outdoor temperature is outside the summer or winter temperature limits, the unit keeps running in a currently activated ventilation mode. Ventilation intensity is reduced to "Minimum airflow" proportionally to the rising (summer temperature range) or decreasing (winter temperature range) outdoor temperature.

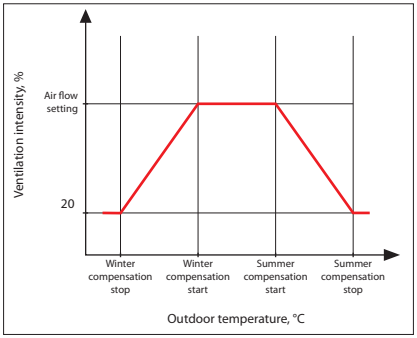

Fig. 1. OCV function operation

OCV function is blocked if SNC functions are activated at the same time. This function also has priority over AQC function.

For information on how to activate this function and set temperature ranges see Chapter "Control and Settings".

2.6. Minimum temperature control function (MTC)

Minimum temperature control function forcibly reduces the user-defined ventilation intensity when the set minimum temperature cannot be reached. Fan speed is gradually reduced when the outdoor temperature drops below + 5 ° and the power of the heat exchanger and heater is insufficient to reach the minimum temperature. If this function runs for a long time, ventilation intensity is reduced to 20%.

During summer, the minimum temperature control function limits power of coolers when, in case of cooling demand, supplied air temperature is below the minimum set temperature value.

For information on how to activate this function and set a minimum temperature value see Chapter "Control and Settings".

2.7. Operation on demand (OOD)

This function turns on the AHU as soon as the indoor air quality decreases. In this way, the air handling unit will only run when ventilation is required and will remain stopped when the air quality is good. As the air quality decreases and reaches the user-defined critical limit, the air handling unit starts and runs in the last activated operating mode. If the air quality improves within 30 minutes (pollution drops 10% below the critical limit), the unit stops. If the air quality remains poor, the unit keeps operating.

This function requires an additional air quality sensor installed inside the room (see "Installation Manual"). The same sensor is also used for AQC function.

Sensor type is selected during ordering. Later, the sensor type may be changed in the control panel menu "Settings".

For information on how to activate this function and set a critical air quality value see Chapter "Control and Settings".

2.8. Summer night cooling function (SNC)

Summer night cooling function uses the night's cool air to ventilate the premises during summer. This function removes excess heat accumulated during the day and fills the building with cooler outdoor air.

Function runs at night (from 00:00 a.m. to 06:00 a.m.) when the outdoor air is cooler than the indoor air and the indoor temperature is higher than the user-defined limit (i.e. ventilation is required). When this function is activated, the ventilation intensity is increased to the maximum and the outdoor air is supplied to the premises (all cooling devices are switched off, heat exchanger is stopped). The user may also set the room temperature at which the function will be stopped.

Summer night cooling function has priority over ACV and AQC functions.

For information on how to activate this function and set ON/OFF temperatures see Chapter "Control and Settings".

2.9. Override (OVR)

Override function is activated by closing designated contacts in the controller board, i.e. by connecting a switch, cooker hood or a motion sensor (see "Installation Manual"). This function ignores current ventilation mode and switches to the pre-selected mode or stops it. In the function setup screen the user can select any ventilation mode, weekly operation schedule or turning off of the unit. Additionally, the user may also specify conditions when the override function should run:

- All the time – function is activated any time by closing contacts, regardless of whether the unit is operating or stopped.
- When running – function is activated by closing contacts when the unit is operating. When the unit is stopped with a control panel or by a weekly schedule, the function cannot be activated by closing contacts.
- When stopped – function is activated by closing contacts when the unit is stopped. If the unit is already running in any ventilation mode, the function cannot be activated by closing contacts.

This function runs as long as contacts are closed. When the contacts are open, the unit returns to the previous ventilation mode or stops, if it was stopped before activating the function.

2.10. Protective functions

The air handling unit is equipped with several protective functions that affect the operation of the unit. The operator is not allowed to change these settings values. These functions protect the unit and its components against damage as well as provide protection for the building and people when the ventilation system is exposed to dangerous circumstances.

External fire alarm function stops the air handling unit as soon as a signal from the building's fire alarm system or smoke detectors is received. This immediately stops ventilation and fresh air from entering fire zones to prevent fire from spreading. Fire alarm message is displayed on a control panel or other device used for controlling the air handling unit. In case of false fire alarm, for example, due to fire protection system inspections, the air handling unit will need to be restarted after turning off the signal and clearing the fire alarm message. If such tests are run periodically, authorized service person may program the air handling unit to start in the previous mode after turning off the fire alarm.

Connection of the building's fire protection system signal is described in the "Installation Manual".

Internal fire alarm function stops the air handling unit when air temperature increase is detected inside the unit. This can happen, for example, when hot smoke enters the duct system from fire zones both inside and outside the building. This function prevents smoke from spreading inside the premises and warns about a potential fire hazard if the building's fire protection system has not yet responded. If the air handling unit is intended for operation in high temperature premises (for example, in drying chambers, bakeries, etc.), this function may be disabled. This can be done by authorized service person.

Electric heater overheat protection consists of several different control algorithms. Integrated thermostats disconnect electric heater's power supply if its temperature reaches a critical limit (e.g., in case of heater's control electronics failure). Every electric heater has 2 thermostats:

- Automatic thermostat 70°C which prevents heating tubes from overheating when the heater is running at high power and low airflow speed. Protection is restored as soon as the heater cools down and thermostat temperature drops. Heater operation is restored automatically.
- Manual reset thermostat 100°C. This thermostat, in case of overheating, completely disconnects the heater's power supply to protect control electronics and adjacent plastic components. Protection may be reset by pressing the RESET button inside the unit (see Chapter "Troubleshooting").

Eliminate the cause of overheating before restoring the manual reset thermostat of 100°C.

Fan cooling of heating/cooling devices. If the air handling unit is stopped while electric heater or direct evaporation (DX) unit is still running, fan cooling is initiated. Fans run at fixed speed until heater tubes cool down or DX unit's refrigerant pressures stabilize. Blowing time depends on the accumulated heat/cold and ventilation intensity and can take up to 15 minutes.

Water heater frost protection function measures water temperature returning from the heater coil. At low outdoor temperatures, when there's a risk of water freezing, a 3-way water mixing valve is opened and hot water pump is started to prevent temperature of water inside the heater from dropping. If temperature of water returning from the heater coil still falls below the critical limit, the unit is stopped and outdoor air dampers are closed to prevent cold air from entering the unit.

When operating air handling unit in the temperatures lower than 0 °C, it is necessary to use water-glycol mixture as a heat carrier or to maintain a return water temperature of at least 25 °C.

Water flow sensor may also be used as an additional frost protection (see Chapter "Water Flow Monitoring Function").

Counter-flow heat exchanger frost protection[1] is activated at negative outdoor temperatures and continuously monitors pressure difference upstream and downstream the heat exchanger. When condensate accumulates in a plate heat exchanger and ice starts to form, pressure increases and defrosting actions are initiated. During the defrosting cycle an air bypass damper is opened and cold outdoor air is directed to heating devices bypassing the heat exchanger, therefore, during the defrosting cycle the supply air temperature briefly decreases. In the meantime, the extracted warm air melts forming ice crystals. Heat exchanger operation is restored as soon as pressure drops.

For proper functioning of the frost protection CF heat exchanger calibration is necessary (see chapter "CF Heat Exchanger Calibration during Commissioning").

3. OPTIONAL FUNCTIONS

3.1. Humidity control function (HUM)

Humidity control function is intended for maintaining the user-defined air humidity level. This function controls air humidifiers or dehumidifiers according to the user-defined humidity level and also can perform dehumidification using integrated heating/cooling devices. This function requires one or two humidity sensors connected to the C5 controller board (see "Installation Manual").

This function can be used to maintain:

- **Supply air relative humidity level (RH)** – a duct-mounted supply air humidity sensor is needed. Air humidity setpoint is set in %RH.
- **Supply air absolute humidity level (AH)** – a duct-mounted supply air humidity sensor is needed. Air humidity setpoint is set in g/m^3 or g/kg.
- **Indoor air relative humidity level** – when two humidity sensors are used. Indoor air (or extract air) sensor measures the desired humidity level in the premises, whereas the supplied air humidity is limited according to the readings of a duct-mounted humidity sensor.

Settings for humidity control function and humidifier/dehumidifier control type is selected during ordering of the air handling unit. Later, these settings may only be changed by a service representative. Humidity control function has priority over AQC function. For information on how set a desired humidity value see Chapter "Control and Settings".

3.2. Additional zone control (ZN)

This function allows controlling up to three different temperature zones with one air handling unit. Temperature of the main zone is maintained by integrated heaters/coolers. Temperature in other zones is maintained by connected additional zone modules[2], which are used to control duct-mounted heating/cooling devices. Every additional temperature zone will also have a separate temperature sensor and a separate setting for the desired temperature that the user will be able to set with the control panel.

An additional zone module may also control heaters/coolers installed in the same supply air flow, when more heating/cooling power stages are required or a pre-heater is connected upstream the air handling unit.

For more information about this function and connection of heating/cooling devices see "Additional zone control C5" Instruction Manual.

For information on how to activate this function and set a desired temperature value see Chapter "Control and Settings".

[1] Only in CF units.
[2] Sold separately.

UAB KOMFOVENT we reserve the right to make changes without prior notice

3.3. Multi-level frost prevention[1]

When ordering an air handling unit with a counter-flow heat exchanger (CF), you may additionally select a multi-level antifreeze protection function. If this function is ordered, the heat exchanger is fitted with a four-segment damper. If there is a risk of freezing, damper segments close/open in turns, thus preventing the heat exchanger from freezing.

Multi-level frost prevention function starts when outdoor temperature falls below -4 °C.

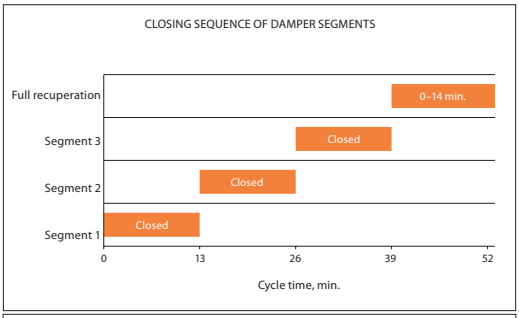

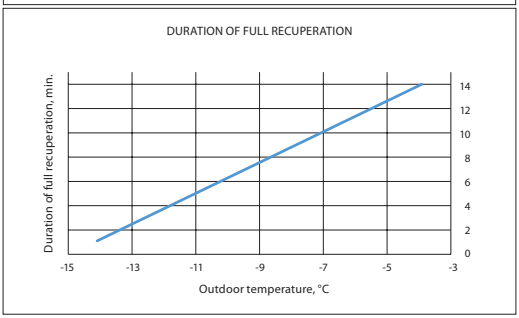

If outdoor temperature drops bellow -15 °C, full recuperation is not done and segments closing/opening intervals are the same.

In frost prevention mode, additionally pressure drop over the exchanger and heat-exchanger efficiency is monitored constantly. In case if pressure drop increases, standard defrosting algorithm takes place, so by-pass damper opens and cold airflow through heat-exchanger is closed.

The function is only activated at the factory and cannot be added to the air handling unit later.

3.4. Combined water heater/cooler

It is possible to use only one water heater and one piping unit (mixing valve, valve actuator, circulation pump) both for heating and cooling. For the function to work properly, an additional external signal (e.g., from a thermostat) is required to switch between heating and cooling modes (see "Installation Manual").

This feature is pre-ordered and configured at the factory. Later, settings of this function may only be changed by a service representative.

3.5. Control of direct evaporation (DX) devices

When the unit is ordered with an additional direct evaporation (DX) coil, a feature for controlling an external DX unit is enabled. There are several different ways to control the DX unit:

- Modulated control – DX device is controlled by 0..10 V signal.
- Stepping control – START/STOP type DX devices are used.

This feature is pre-ordered and configured at the factory. Later, settings of this function may only be changed by a service representative.

[1] Optional for VERSO CF except flat units.

3.6. Water flow monitoring function

Water flow monitoring function is intended for additional protection of a water heater coil. Flow sensor monitors water flow and emits a signal as soon as it slows down to a critical limit or stops completely. Then the air handling unit is stopped and the control panel displays an error message.

Water flow can decrease for a variety of reasons, for example, faulty water pump or jammed valve; decreased water flow is extremely dangerous at low outdoor temperatures as water could freeze and damage the heat exchanger. If this function is ordered in advance, the air handling unit is equipped with a water flow sensor and a 3-way valve for installation thereof. For more information please see the "Water Flow Monitoring Function Manual".

3.7. External pressure manometers for monitoring filter contamination

Additional manometers can be ordered for monitoring filter contamination. These gauges will show filter pressure changes in real-time. Manometers are ordered in advance with the unit and installed in the factory. Manometers are mounted outside the unit at exhaust and outdoor air filters.

4. CONTROL AND SETTINGS. CONTROL PANEL C5.1[1]

Air handling unit may be conveniently controlled via the following ways:

- Control panel.
- Mobile app.
- Web browser.

C5.1 panel has a colour touchscreen. If the unit is connected to the mains, the control panel will display the home screen or screen saver that you can switch off with a single tap.

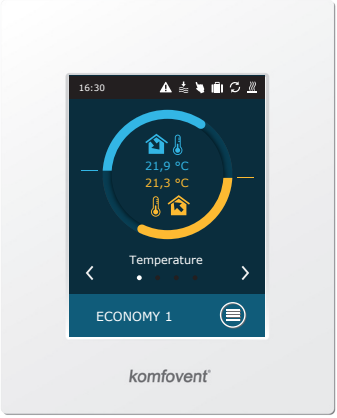

[1] Sold separately.

UAB KOMFOVENT we reserve the right to make changes without prior notice

This control panel is designed for indication and changing of various functions and settings of the unit. Touch-sensitive display reacts to soft taps, therefore, do not use any sharp tools (screwdrivers or pens), also do not apply excessive force as it may damage the display.

Main screen

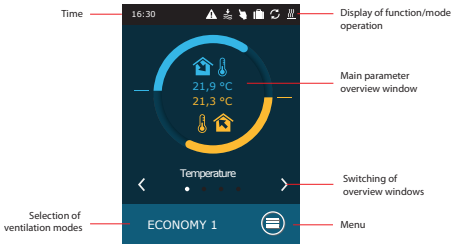

Menu window

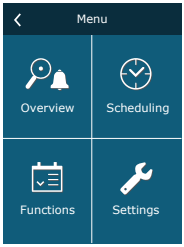

Selection of ventilation modes

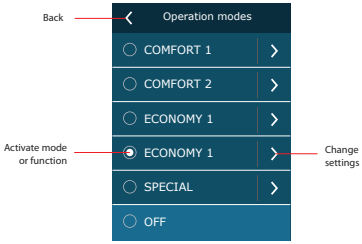

Parameter modification window

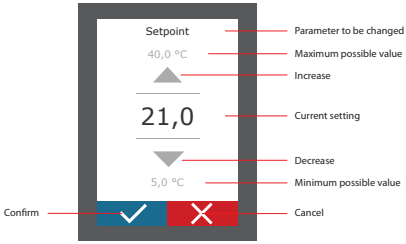

The symbols shown in the legend

	Supply air temperature
	Extract air temperature
	Supply air volume
	Extract air volume
	Supply air humidity
	Extract air humidity
	Extract (room) air quality
	Fan operation
	Air flow increasing by activated function (see chapter Functions)
	Air flow decreasing by activated function (see chapter Functions)

	Energy recovery operation
	Air heater operation
	Air cooler operation
	Air humidifier operation
	Summer night cooling mode
	Weekly operation mode
	Holiday operation mode
	„Override“ mode
	Alarm signal

4.1. Parameter overview

The following parameters are displayed in the main window and parameter overview windows: air flow, temperatures, air quality sensor data and energy recovery. Use arrows on the sides of the main screen to browse across parameter windows.

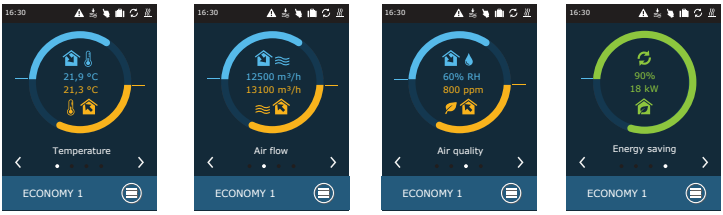

For more parameters see “Detailed information” screen (Menu → Overview → Detailed information).

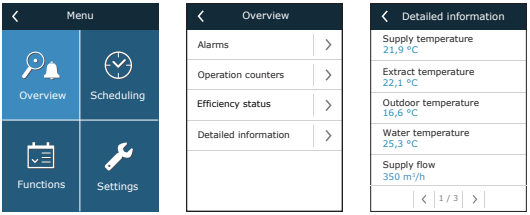

4.2. Turning on and selection of ventilation modes

To start an air handling unit or to change a ventilation mode:
1. Press the ventilation mode selection button.
2. Confirm the message if you want to run the device in the previous mode (if the unit is stopped).
3. Cancel the message if you want to select another operating mode or you do not remember which mode was activated previously.
4. Select a desired ventilation mode.
5. Press the return key and confirm the message that appears.

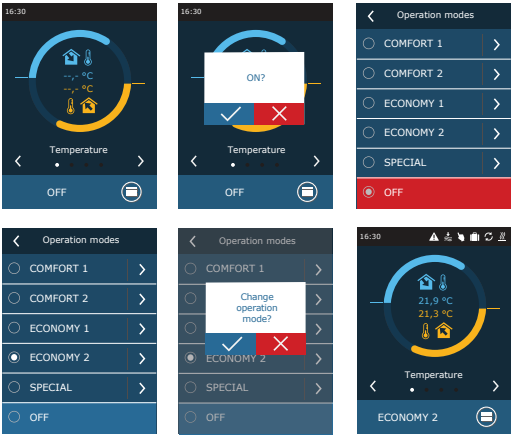

During the first minute of starting the unit, the unit automation checks the settings, automation components and opens air dampers. Later, a signal is released to fans and a heat exchanger, and the unit starts operating at a selected ventilation mode.

UAB KOMFOVENT we reserve the right to make changes without prior notice

4.2.1. Calibration of the CF heat exchanger during commissioning[1]

The first time you turn on your CF air handling unit, you will have to perform calibration of a heat exchanger (if not performed during installation). This calibration is necessary for proper operation of the antifreeze prevention function (for more information about calibration see Chapter "Efficiency Status").

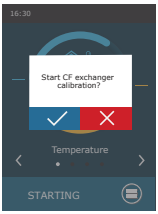

4.3. Setting parameters of ventilation modes

To change the ventilation mode settings:
1. Press the ventilation mode selection button.
2. Press "Change settings" symbol next to the parameter to be changed.
3. Press a parameter you want to change.
4. Use the arrows to select a desired value and press to confirm.
5. Press the return icon at the top of the screen to return to the home screen.

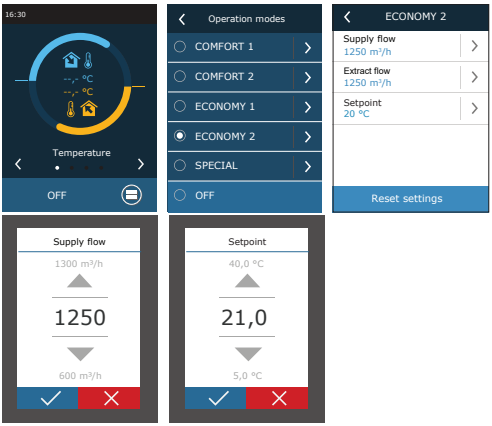

SPECIAL ventilation mode may also be used to disable heating/cooling and other functions. This saves energy when temperature and other ventilation parameters are less important (for example, at night, when the building is empty, when cooling devices can be turned off and will not be activated even when temperature exceeds the desired temperature during the day).

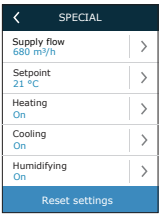

[1] Only in CF units.

4.4. Scheduling window and ventilation schedule settings

In menu item “Scheduling” you can create your own ventilation schedules so that the ventilation intensity or temperature settings change automatically.

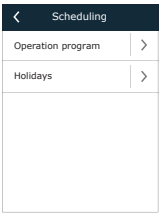

- **Operation program**

You can set up to twenty operating programs. You can assign a desired operating mode, day of the week and time interval for every program.

To create a weekly ventilation schedule:

1. Press “Sheduling” key in the menu window.
2. Press “Operation program”.
3. Press “Add new program” key at the bottom.
4. Select a desired ventilation mode. If you don’t want your unit to run at a specified time, select standby mode[1].
5. Select days of the week for the program to run.
6. Set the start and end time for the program.
7. Add additional programs, if needed (up to 20 programs).
8. Once the schedule is created, activate it by checking “Enable” box and returning to the main window.

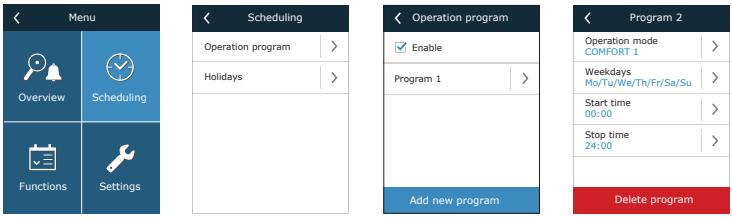

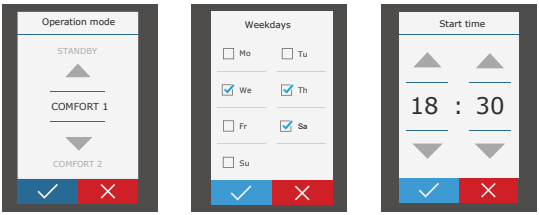

[1] Standby mode is optional. The device will only operate at a set time. The unit will automatically stop during unspecified periods.

UAB KOMFOVENT we reserve the right to make changes without prior notice

- **Holidays**

Here you can select a holiday program, set dates for the unit to run in a selected mode or to be stopped (e.g., stopping the air handling unit in the office during Christmas holidays).

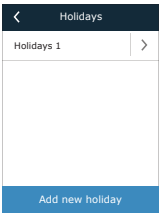

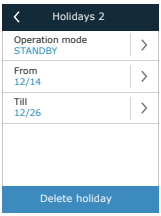

4.5. Overview window

"Overview" screen shows information about the status of the air handling unit and its devices.

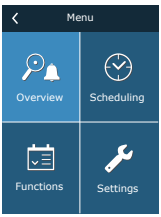

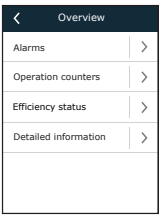

- **Alarms**

This menu item displays relevant messages with identification codes. "A" at the end of the code means that the error is critical and the unit will be stopped until the fault is rectified. "B" at the end of the code means that the message is informational and the unit will keep running. Once the cause is resolved, delete relevant errors and messages by pressing "Reset". For more information see Chapter 8. "Troubleshooting".

Press "History" button to show the last 50 messages along with the date and time they were displayed.

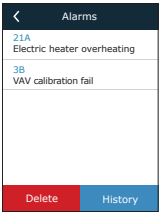

- **Operation counters**

These meters show operating time of individual devices, amount of energy returned and consumed. To reset a meter, press an arrow next to a desired parameter.

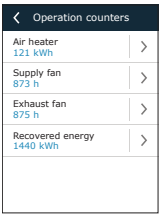

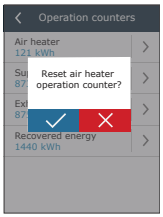

- **Efficiency status**

  Heat exchanger parameters are displayed in real-time.

  In this menu you can also calibrate CF heat exchanger[1], if not calibrated during the first start-up. If calibration was successful and the display shows "Calibrated", there is no need to repeat it. During calibration, the unit will run for 10 minutes by changing fan speed and will be measuring pressure inside the unit, therefore, do not open the unit door, do not adjust the duct system or change parameters at that time. To stop calibration, turn off the unit with a control panel.

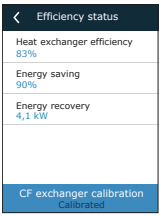

- **Detailed information**

  This menu item displays readings of all sensors installed in the unit as well as information on operation of individual devices of the AHU and other detailed data.

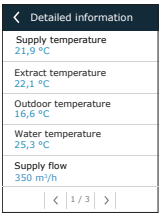

4.6. Functions

In menu item "Functions" you can activate or alter all functions of the unit. Press the function name or an arrow to display the function settings.

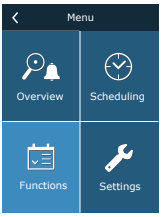

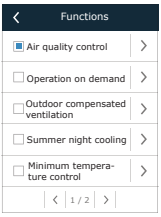

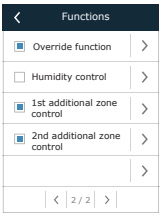

Function status is indicated in a box next to the function name:

Blank box: function is disabled.

Blue box: function is working.

Grey box: function is activated but not working.

In the settings of each function you can activate the function and alter operating conditions.

[1] Only in CF units.

UAB KOMFOVENT we reserve the right to make changes without prior notice

- **Air quality control (AQC)**

Selecting an air quality limit up to which the air handling unit will run during the activated mode and above which the ventilation intensity will be automatically increased. Air quality limit is set for two different ventilation modes during which the function will be used and the desired value will change automatically as the mode changes. If the unit operates in a different ventilation mode than the one set, air quality control function will be disabled automatically.

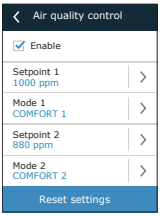

- **Operation on demand (OOD)**

Setting a critical air quality sensor value. The unit starts as soon as this value is exceeded.

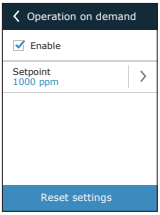

- **Outdoor compensated ventilation (OCV)**

Setting winter and summer outdoor temperature limits for reducing ventilation intensity. When the outdoor temperature is within the range of "Winter compensation start" and "Summer compensation start", the unit operates in a selected ventilation mode and when ourdoor temperature is out of range, fan speed is decreased to "Minimum airflow".

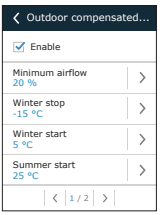

- **Summer night cooling (SNC)**

Setting two indoor temperatures for the function to start running and stop.

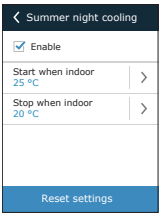

- **Minimum temperature control (MTC)**
  Setting a minimum desired supply air temperature.

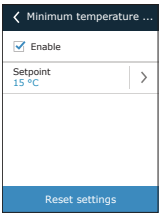

- **Override function (OVR)**
  Selecting conditions for activating the function (all the time, only when the unit is running, only when the unit is stopped) and specifying ventilation mode for the unit to run when the function starts. If the "Standby" ventilation mode is selected, the unit will be stopped.

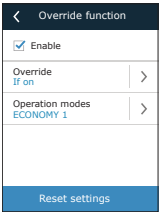

- **Humidity control (HUM)**
  Setting a desired relative or absolute humidity level. Humidity level is set for two different ventilation modes during which this function will be used and the desired value will change automatically as the mode changes. If the unit operates in a different ventilation mode than the one set, humidity control function is disabled automatically.

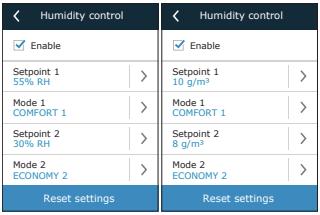

- **Additional zone control (ZN)**[1]
  In this window you can set a desired supply air temperature for an individual ventilation zone.

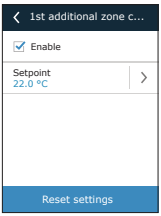

[1] This function only runs when optional additional zone modules are connected.

- **Water heater/cooler**

It is possible to block the water heaters and coolers by removing the check mark next to the related setting. In this case, water heaters and coolers will not be used either for the desired temperature or in any functions (for example during dehumidification). However, the water heater's freeze protection will work all the time, and if the water temperature drops below the critical limit, AHU will be stopped.

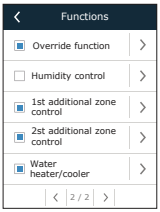

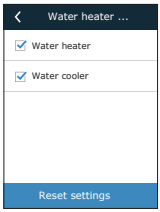

4.7. Settings

All settings are divided into two groups, covering the main settings of the air handling unit and the user interface.

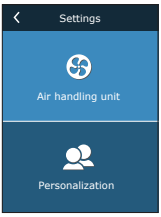

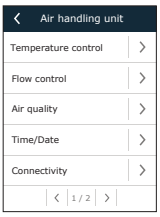

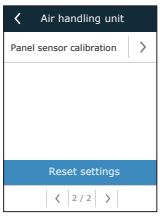

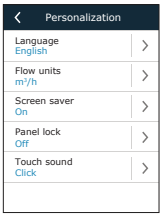

4.7.1. Air handling unit

- **Temperature control**

The user can select a desired temperature control method (see Chapter "Temperature Control"). The user-set temperature will be maintained during ventilation modes according to the selected control method.

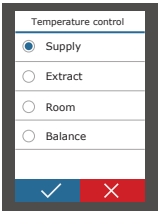

- **Flow control**

The user can select a desired air flow control method (see Chapter "Air Flow Control").

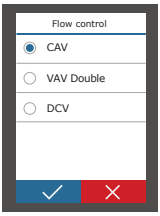

- **Air quality**
  Selected air quality sensor type is used in AQC, OOD functions.

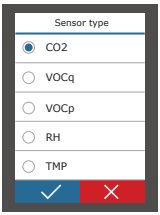

- **Time/data**
  Time and date settings are used for ventilation by weekly or holiday schedules.

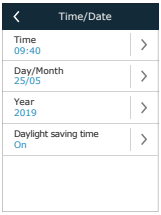

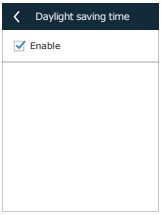

- **Connectivity**
  Parameters for connecting the air handling unit to a computer network, the Internet or a building management system.

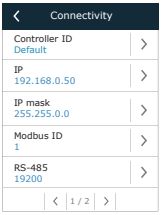

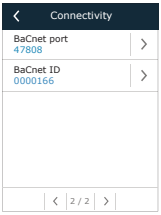

- **Panel sensor calibration**
  If the temperature and/or relative humidity measured by internal control panel sensors do not match the parameters measured by other devices, the accuracy of the sensors can be adjusted in this menu. The measured temperature may be adjusted within ± 5 ° C and the humidity within ± 10% range.

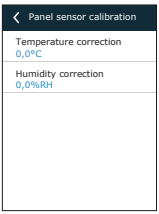

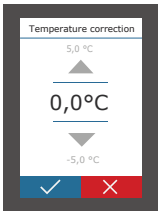

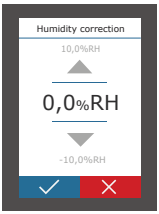

UAB KOMFOVENT we reserve the right to make changes without prior notice

4.7.2. Customization

- **Language**
  Selecting language of the user interface.

- **Flow units**
  Selecting measurement units for air flow measurement. "Pa" can only be selected if the VAV flow control type is enabled.

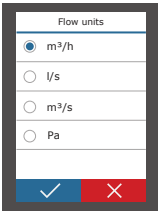

- **Screen saver**
  Screen saver is activated after 1 minute of inactivity on the control panel. In this menu the user can enable/disable a screen saver and select parameters to be displayed on screen.

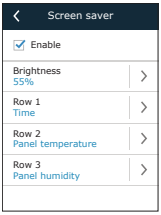

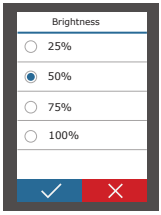

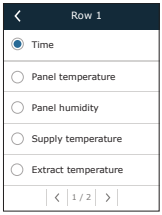

- **Panel lock**
  The panel can be locked using a four-digit code. To activate a panel lock, enter your PIN code and press Confirm. When the lock is activated, the panel will lock every time a screen saver appears. You will need to enter the same code again to access the main window or other settings. You must enter a correct PIN code to use the panel. To deactivate the panel lock, enter the same PIN code again in the setup menu.
  If you forget your PIN code, you can unlock the panel by connecting to the air handling unit with a computer and resetting factory settings (see Chapter "Control and settings. Computer").

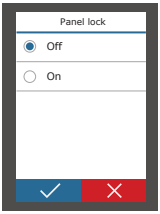

- **Touch sounds**
  You can turn on/off touch sounds. Two types of touch sounds are available.

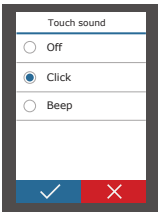

5. CONTROL AND SETTINGS. COMPUTER

The unit may be controlled via computer using a web browser. For information on how to connect the unit to an internal network or directly to a computer, see the "Installation Manual".

Enter the device IP address in your web browser (IP address is displayed on the control panel) (see Settings → Air handling unit → Connectivity):

Connect to the user interface: enter the user name ***user***, password ***user***[1] and press "Login".

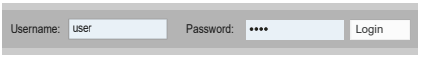

If the login is successful, the overview window is displayed. The overview window contains a simplified diagram[2] and information about operation of the unit. You can also turn your AHU on/off in this window.

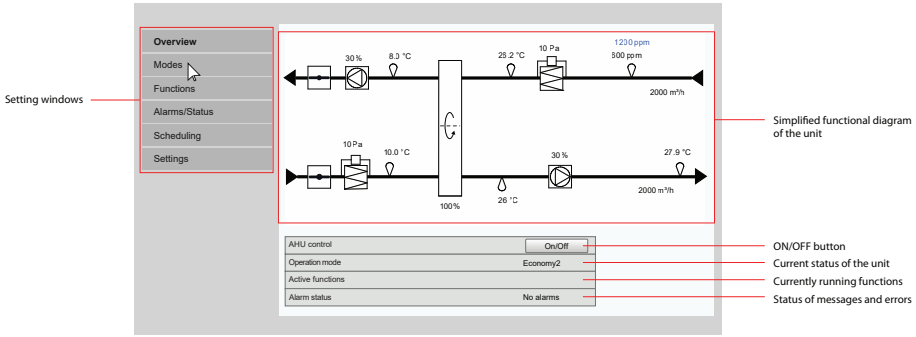

5.1. Modes

In this menu item, the user can alter the ventilation mode, flow and temperature control settings. Press the "Save" button for the changes to take effect.

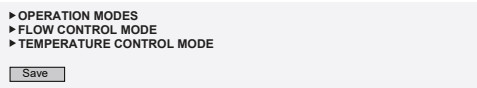

[1] If You forgot a changed password, it can be reset to the initial "user" from the control panel (Settings→Air handling unit→Reset settings).
[2] Displayed unit diagram depends on the unit type and ordered components.

5.1.1. Operation modes

In this menu item the user can select one of the five ventilation modes for the unit (see Chapter 2.1 “Ventilation Modes”). Selecting the “Program” mode:

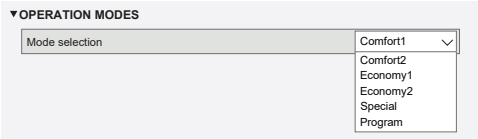

You can select air volume (for supplied and extracted air separately) and desired temperature for each ventilation mode. Air volume is set in the units specified in the user interface settings.

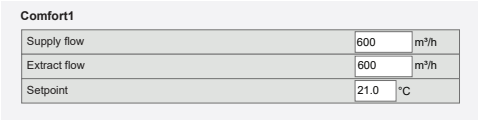

“Special” ventilation mode may also be used to block heating/cooling signals and disable humidification functions. To disable a function, uncheck a box next to the setting.

5.1.2. Flow control modes

Selecting an air flow control method for controlling fan speed (see Chapter 2.2 “Air Flow Control”).

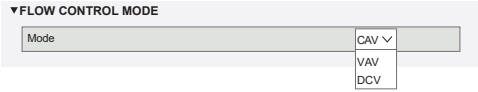

5.1.3. Temperature control modes

Selecting a temperature control method for controlling heating/cooling devices (see Chapter 2.3 “Temperature Control”).

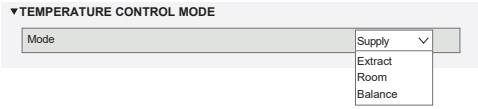

5.2. Functions

Here you can enable/disable ventilation functions and change their settings.

5.2.1. Air quality control (AQC)

Selecting air quality limit up to which the air handling unit will operate in a selected mode and above which the ventilation intensity will be automatically increased. Air quality limit is set for two different ventilation modes during which the function will be used and the desired value will change automatically as the mode changes. If the unit operates in a different ventilation mode than the one set, air quality control function will be disabled automatically.

▼AIR QUALITY CONTROL (AQC)

Enable	☑	
Setpoint 1	800	ppm
Mode 1	Economy1	
Setpoint 2	1200	ppm
Mode 2	Comfort1	

5.2.2. Outdoor compensated ventilation (OCV)

Setting winter and summer outdoor temperature limits for reducing ventilation intensity. When the outdoor temperature is within the range of “Winter compensation start” and “Summer compensation start”, the unit operates in a selected ventilation mode and when ourdoor temperature is out of range, fan speed is decreased to “Minimum airflow”.

▼OUTDOOR COMPENSATED VENTILATION (OCV)

Enable	☑	
Minimum airflow	20	%
Winter compensation stop	-40.0	°C
Winter compensation start	0.0	°C
Summer compensation start	20.0	°C
Summer compensation stop	50.0	°C

5.2.3. Minimum temperature control (MTC)

Setting a minimum desired supply air temperature.

▼MIN. TEMPERATURE CONTROL (MTC)

Enable	☑	
Setpoint	18.0	°C

5.2.4. Summer night cooling (SNC)

Setting two indoor temperatures for the function to start running and stop.

▼SUMMER NIGHT COOLING (SNC)

Enable	☑	
Start when indoor	25.0	°C
Stop when indoor	25.0	°C

5.2.5. Override function (OVR)

Selecting conditions for activating the function (all the time, only when the unit is running, only when the unit is stopped) and specifying ventilation mode for the unit to run when the function starts. If the "Standby" ventilation mode is selected, the unit will be stopped.

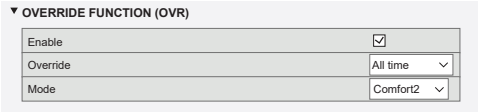

5.2.6. Operation on demand (OOD)

Setting a critical air quality sensor value. The unit starts as soon as this value is exceeded.

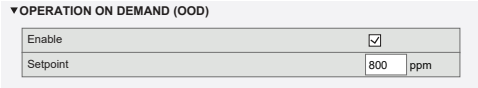

5.2.7. Humidity control (HUM)[1]

Setting a desired relative or absolute humidity level. Humidity level is set for two different ventilation modes during which this function will be used and the desired value will change automatically as the mode changes. If the unit operates in a different ventilation mode than the one set, humidity control function is disabled automatically.

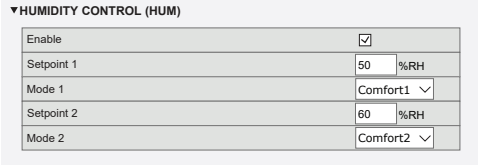

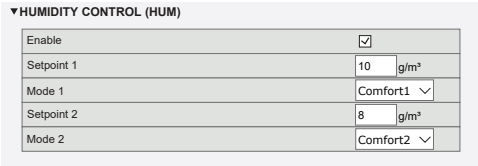

5.2.8. Additional zone control (ZN)[2]

Setting a desired supply air temperature for an individual ventilation zone. You can also monitor temperature of air supplied to the additional zone as well as the heating/cooling signals.

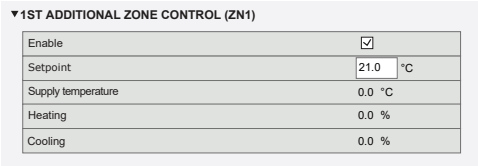

[1] Displayed only when this function is pre-ordered.
[2] This function only works when optional additional zone modules are connected.

5.2.9. Water heater/cooler

It is possible to block the water heaters and coolers by removing the check mark next to the related setting. In this case, water heaters and coolers will not be used either for the desired temperature or in any functions (for example during dehumidification). However, the water heater's freeze protection will work all the time, and if the water temperature drops below the critical limit, AHU will be stopped.

5.3. Alarms/Status

This menu item shows information about the air handling unit and its assemblies.

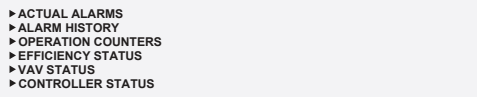

5.3.1. Actual alarms

This menu item displays relevant messages with identification codes. "A" at the end of the code means that the error is critical and the unit will be stopped until the fault is rectified. "B" at the end of the code means that the message is informational and the unit will keep running. Once the cause is resolved, delete relevant errors and messages by pressing "Reset". For more information see Chapter 8. "Troubleshooting".

5.3.2. Alarm history

Displays the last 50 messages and errors, along with the date and time they occurred.

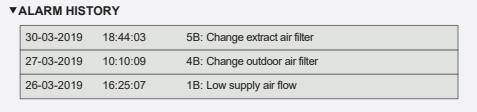

5.3.3. Operation counters

Depending on the configuration of the unit, operating meters display operating time of various units and the amount of energy returned by the heat exchanger.

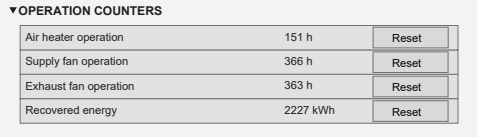

5.3.4. Efficiency status

▼EFFICIENCY STATUS

Heat exchanger thermal efficiency		---
Heat exchanger recovery		8.6 W
Thermal energy saving		100 %
CF exchanger calibration	Calibrated	Run

In this menu you can also calibrate CF heat exchanger[1], if not calibrated during the first start-up. If calibration was successful and the display shows "Calibrated", there is no need to repeat it. During calibration, the unit will run for 10 minutes by changing fan speed and will be measuring pressure inside the unit, therefore, do not open the unit door, do not adjust the duct system or change parameters at that time. To stop calibration, turn off the unit with a control panel or in the Overview screen.

Start CF exchanger calibration?

Ok Cancel

5.3.5. VAV status

This window is intended for VAV mode calibration. Calibration must be performed by a qualified specialist in accordance with a separate "VAV Function Installation Instruction".

▼VAV STATUS

VAV mode	Double
VAV calibration	Run

5.3.6. Controller status

Overview of the controller and control panel software versions.

▼CONTROLLER STATUS

Main module firmware	v2.340
1st zone module firmware	v1.200
Control panel firmware	v2.223
Log	Download

For detailed performance analysis, you may download a device logbook (Log) which contains weekly operation data. To open a logbook you will need a "Log plotter" app that you can download on the "Komfovent" website. This data can be useful in the event of a failure and may facilitate repair procedures, therefore, we recommend downloading an operation logbook and handing it over to the authorised service personnel.

[1] Only in CF units.

5.4. Scheduling

In this menu the user can set weekly and holiday schedules.

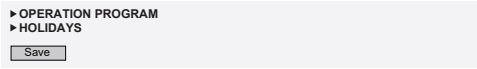

5.4.1. Operation program

You can set up to twenty operating programs. You can assign a desired operating mode, day of the week and time interval for every program. When the “Program” mode is selected in the ventilation mode setup screen, the air handling unit will only operate at a specified time. There is no need to set periods for stopping the unit.

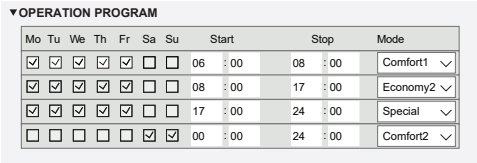

5.4.2. Holidays

Here you can select a holiday program, to set dates for the unit to run in a selected mode or to be stopped (e.g., stopping the air handling unit in the office every year during Christmas holidays).

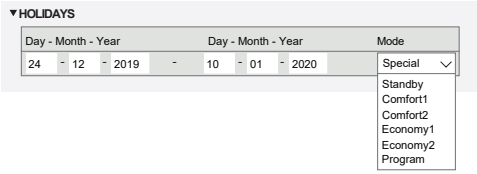

5.5. Settings

Settings menu is intended for user interface configuration. Here you can set the time, language, measurement units, computer network settings, or change the login password.

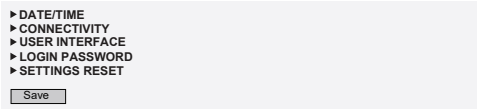

5.5.1. Date/time

In this menu item the used can set the time and date of the unit, used for various functions and operation by a weekly schedule. When the “Daylight Saving Time” function is enabled, the clock will automatically switch between summer time and winter time in spring and autumn.

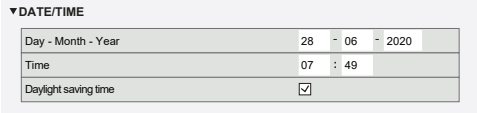

5.5.2. Connectivity

Setting IP address, Modbus and BACnet or computer network parameters.

▼CONNECTIVITY

IP	192	168	0	50
IP mask	255	255	0	0
Modbus ID	1			
RS-485	19200 baud	8E1		
Modbus ID	47808			
Modbus ID	166			

5.5.3. User interface

Here you can select the user interface language (the same language will be used on the control panel), air flow measurement units and the device name that will be displayed in the web browser. If one computer is used to control several air handling units, we recommend naming every unit differently. This will facilitate distinguishing the units.

▼USER INTERFACE

Language	English
Flow units	m³/h
AHU name	Komfovent

5.5.4. Log-in password

Here you can change your password used to log in to the air handling unit in a web browser. New password must have at least 4 characters. Forgotten password can be restored by resseting AHU settings to factory defaults.

▼LOGIN PASSWORD

Enter new password	
Confirm new password	

5.5.5. Restoring factory settings

Click the "Reset" button to undo all user-performed changes (desired temperature, air volume, function settings, weekly schedule, etc.) and to restore factory settings (the user interface language will be restored to English).

▼SETTINGS RESET

Reset settings to default values	Reset

A factory reset also removes a PIN code. If you have locked the panel and forgot the PIN code, a factory reset will restore the PIN code to 0000 and then you will be able unlock it.

Write down the computer network parameters before restoring factory settings (see Menu "Connectivity"), as these settings will also be reset and communication with the air handling unit may be lost until re-configuration.

6. CONTROL VIA A SMARTPHONE

"Komfovent C5" app is necessary for controlling your air handling unit via your mobile phone. The unit can be controlled in a local network via mobile phone. Controlling the air handling unit with your mobile device is almost the same as with a C5.1 control panel. Screens and settings are so similar that you can follow the chapter "C5.1 Control Panel" to perform necessary changes or settings. The app language is automatically selected according to the language used in your mobile device and can differ from the language set in your air handling unit.

Connect the unit to a network router. The unit IP address must be on the same gateway as the network router. If the default IP address is incorrect, set the IP address and IP mask (see the "Connectivity" menu). Connect your mobile device to the internal network via Wi-Fi and run the "Komfovent C5" app. Launched for the first time, "Komfovent C5" app will attempt connecting to default IP address (192.168.0.50) (if not changed); after a while a home screen for the air handling unit will appear on the mobile phone screen. If you changed the IP address according to the router settings, "Communication error" message will be displayed. In this case connection settings must be changed:

- Press Menu → Settings → Connectivity.

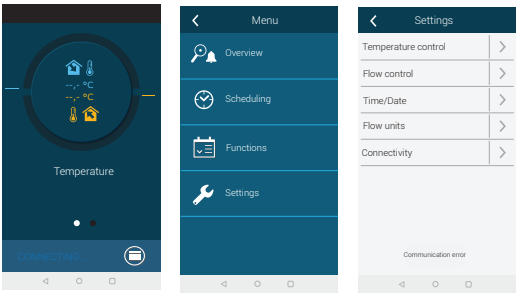

- Press "Add new" at the bottom.
- Enter your device name and new IP address.
- Enter port number 502 and confirm settings.

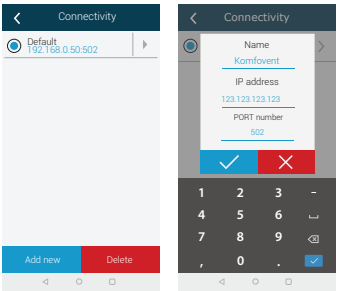

- Select a row with newly entered settings and press the return button.
- When the app asks you if you want to connect to the selected unit, confirm the message.
- Once connected to the unit, the main screen and current status of the unit will be displayed on the app.

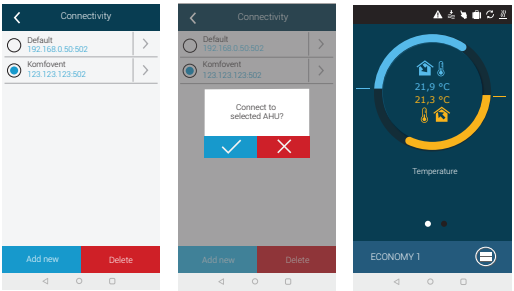

UAB KOMFOVENT we reserve the right to make changes without prior notice

7. PERIODIC MAINTENANCE

For proper operation of the air handling unit, it should be periodically inspected, the air filters replaced in due time and the interior of the unit cleaned. Some of the maintenance works can be performed by the user and others only by a qualified specialist.

- **Before starting any tasks, make sure that the unit is unplugged from the mains.**
- **Use caution when performing works near internal or external heaters as their surfaces may be hot.**
- **Remove all foreign objects and tools from the unit.**
- **Use appropriate safety equipment (gloves, goggles).**
- **If you have washed or cleaned any of the components, wait for them to dry completely before starting the unit.**

The following table provides recommended regular maintenance intervals for the unit. Actual frequency of maintenance procedures depends on operating conditions, amount of dust and impurities in the supplied air as well as environment in which the unit is installed. Maintenance intervals may be shorter, following the national hygiene norms and specific requirements for ventilation of the premises. Locations of all the mentioned device components and notes indicated in the "Installation Manual".

Task	Frequency			
	Commissioning	3 months	6 months	12 months
7.1. Housing				
Mechanical damage	X			X
Air-tightness and gaskets of the sections	X			X
Horizontality of the sections	X			X
Air-tightness and gaskets of doors and locks	X			X
Air damper operation	X		X	
Condensate drainage	X		X	
Cleaning of drip trays			X	
7.2. Filters				
Visual inspection of filters	X	X		
Inspection of filter pressure relays	X	X		
Filter replacement			X	
7.3. Fans				
Extraneous noise and vibrations	X		X	
Fan operation, speed adjustment	X		X	
Cleaning of the impeller				X
Motor overheat protection	X		X	
7.4. Rotary heat exchanger				
Belt inspection	X		X	
Motor operation	X		X	
Drum brushes and seals				X
Free rotation and bearings of the drum			X	
Drum cleaning				X
7.5. Counter-flow heat exchanger				
Air bypass valve operation	X		X	
Tightness and gaskets of the heat exchanger				X
7.6. Water heater/cooler				
Fluid leakage	X		X	
Operation of valves, gears, pumps	X		X	
Frost protection	X		X	
Cleaning of the heat exchanger				X
7.7. Direct evaporation cooler/heater				
Refrigerant leak	X		X	
Cleaning of the heat exchanger				X
Operation of an external unit	X		X	
7.8. Electrical heater				
Wiring	X		X	
Operation of overheat protection	X	X		
Cleaning of heating elements				X

The inside of the air handling unit can be cleaned with a vacuum cleaner and/or a damp cloth. When cleaning, prevent water from entering electrical components of the unit. Make sure all surfaces are completely dry before starting the unit.

7.1. Housing

Once the unit is installed (and periodically) check whether there are no foreign objects, debris or tools inside the unit. Inner and outer surfaces shall be cleaned with a damp cloth or a vacuum cleaner. Also check the housing for mechanical damage or signs of corrosion which could affect normal operation of the unit. As building stability may change over time (e.g., settling of foundations), regular unit horizontality checks using a level gauge are recommended; levelling shall be performed if needed. Deviations must not exceed 0.3mm for 1m in the longitudinal direction and 0.5mm for 1m in the transverse direction; otherwise, sections may warp and loosen their connections. Check the unit doors for tightness and if all gaskets or sealant joints are intact. Replace gaskets and reseal joints, if needed. Inspect air collection/exhaust dampers and grilles. Remove accumulated dirt; check dampers for proper opening and tight closing. Check operation of electric actuators and wiring contacts of dampers. Check whether condensate is freely removed from drip trays; check siphons for proper operation; check drainage pipeline components for damage/blockage. If the unit is equipped with drip trays, regularly clean any dirt from drip trays. Inspect power supply installation, contacts and automatic switches. Check the tightness of the wires connected to the automatic circuit breakers, contact relays and main switch.

7.2. Filters

Filter contamination is monitored by integrated pressure relays. These relays are set for a given differential pressure, depending on the filter type. When filter is contaminated, an error message is displayed on a control panel or a computer.

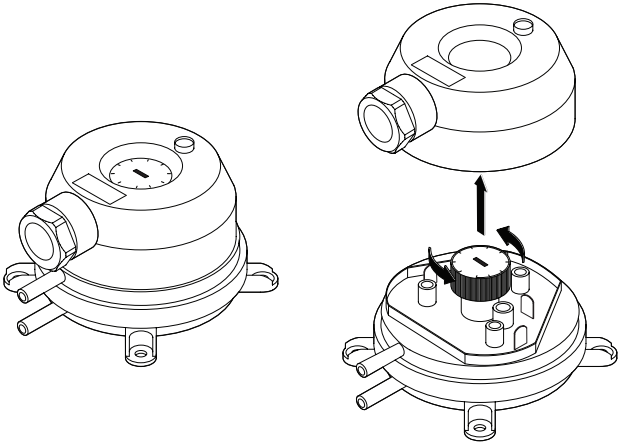

Fig. 2. Pressure relay

Check if filters are not damaged, torn or dampened. Filter replacement intervals depend on the environment as well as time of year, for example, during spring and summer filters may be contaminated with pollen, pubescence or insects, therefore replacement intervals are shorter. Replace filters if they are visibly dirty even though it is not time yet and a filter change message is not displayed yet. Contaminated filters increase pressure loss of the unit, reduce purification efficiency and increase power consumption. Once the filters are removed, clean all dirt accumulated on the walls of the unit.

Filters are removed/inserted one by one (number of filters depends on the unit size). For some filter sizes an additional sealing gasket must be attached to the frame edge to ensure air tight construction. If the unit is fitted with pocket filters, these filters are installed in a special filter clamping device. To remove such filters, pull handles at the top and bottom of the filter backwards to release a filter clamping device (see Annex 1 "Filter Replacement"). Once the filters are replaced, make sure to properly fix the filter clamping device so it tightly presses the filters to the gaskets.

When inserting filters, make sure that their pockets[1] are upright, filter frames are tightly seated and gaskets are intact.

In case filters from another manufacturer or filters of other filtration class is used instead of factory-fitted filters, pressure relay range shall be adjusted after filter replacement. Pressure relays are adjusted by removing the top cover and rotating the handle to the required differential pressure limit (see Fig. 2). As soon as the differential pressure reaches the set limit, filter contamination message is displayed.

Once the filters are replaced, clear the contaminated filter message on a control panel or computer.

[1] In units with pocket filters.

UAB KOMFOVENT we reserve the right to make changes without prior notice

7.3. Fans

Check whether fans rotate freely without obstructions, extraneous noise and vibrations. Check the fan frame shock absorbers for wear. Replace worn out or damaged components, if needed. Dirt, grease or dust may unbalance the impeller and cause additional vibrations as well as shorten the motor service life. Impeller shall be cleaned with a damp cloth. Motor surfaces shall be cleaned with a dry cloth or a vacuum cleaner. Check motor connecting cables; check for corrosion on contacts; clean contacts with special agents, if needed. Check operation of a motor overheat protection, if installed. Turn on the ventilation device and check whether the fans are rotating to the desired direction and the rotation speed alternates depending on the automation settings.

7.4. Rotary heat exchanger

Check whether the rotor drum rotates freely, is not touching any metal parts of the housing, and its bearings are intact.

Check the actuator and motor. Rotary heat exchanger shall rotate at approx. 12rpm. Check the drum brushes for wear. Replace, if needed. Check the drum belt. Due to the natural wear of the rotor belt, green or black dust is formed, which eventually accumulates near the rotor motor. Clean it with a brush or vacuum cleaner. If there is a lot of such dust, or if it accumulates too quickly, it may mean that the belt is too worn or stretched and is rubbing against the edges of the metal parts of the heat exchanger casing. Inspect the belt for damage and tension. Worn belt may slide without turning the drum at the proper speed. Worn or torn belts must be replaced.

Air channels of the rotary heat exchanger may be contaminated with grease, oils, limescale and other dirt over time. Heat exchanger drum can be cleaned with compressed air jet (~6 bar) inside the unit. If dirt cannot be removed with compressed air or as provided for in the requirements for ventilation of the building premises, the rotary heat exchanger can be removed from the unit and washed with water.

- **When washing, make sure to protect nearby motor and other electrical components against water and detergents.**
- **Dry the rotor drum before reassembling it.**

7.5. Counter-flow heat exchanger

Check the bypass valve and actuator for proper operation, proper opening and tight closing. Check differential pressure sensors and tubes of the heat exchanger, if installed. Inspect gaskets and sealed connection joints. Replace gaskets and reseal joints, if needed. Air channels of the heat exchanger may be contaminated with grease, oils, limescale and other dirt over time. It shall be cleaned with compressed air (~6 bar). If dirt cannot be removed with compressed air or as provided for in the requirements for ventilation of the building premises, counter-flow heat exchanger can be cleaned with water. When washing, make sure to protect nearby electrical components, valve actuators or fans against water and detergents. Ensure that water enters condensate trays properly and drains from the unit. If possible, remove the heat exchanger from the air handling unit before washing.

7.6. Water heater/cooler

Check for fluid leakage; check for proper operation of a check valve and a pump. Check threaded connections for tightness. Check operation of an antifreeze protection system. Check whether the return water temperature sensor is installed and isolated correctly. Check a capillary thermostat, if installed, for proper operation.

Dirt from the water coil surfaces shall be removed with compressed air. Be careful not to damage the coil lamellas while cleaning.

7.7. Direct evaporation cooler/heater (DX)

Check for refrigerant leaks. In a humidity indicator check whether the refrigerant is moisture free; check for sufficient amount of refrigerant. Check operation of the external unit and temperature sensors. Perform regular maintenance works of a direct evaporation cooler/heater in accordance with the manufacturer's documentation.

Dirt from the refrigerant coil surfaces shall be removed with compressed air. Be careful not to damage the coil lamellas while cleaning.

7.8. Electrical heater

Check operation of overheat thermostats and automation. Inspect power supply installation, contacts and automatic switches.

Heating tubes of the electrical heater may get contaminated with dust and other dirt that may ignite under excessive heat, therefore they must be cleaned. Tubes must be cleaned with a damp cloth or compressed air. Wait for the tubes to dry completely before turning on the device.

8. TROUBLESHOOTING

Device automation continuously monitors the operation of various nodes and function algorithms. If something goes wrong, the device informs you with a message and an audible alarm from a control panel. Messages are divided into critical messages and notifications. Critical messages occur when the device cannot continue operation without intervention of the user or an authorised service representative. Notifications are used to warn the user about possible faults or small discrepancies but they do not stop the device.

In case of a message, perform the following actions:

- Read the message and note its number displayed on screen (control panel, computer, smartphone).
- Stop the unit. If heating/cooling devices were running at that time, after pressing the OFF button they will keep running for a few minutes until their temperature is stabilized.
- When the unit stops, unplug it from the mains.
- Find tips in the "Alarm Table" by the message number.
- If possible, eliminate the cause. If a fault cannot be resolved, contact an authorized service representative.
- After troubleshooting, make sure no foreign objects, debris or tools are left inside the unit, and only then close the unit door.
- Connect the unit to the mains and delete all messages from the message window.
- If a fault is not resolved, depending on its nature, the device may not start at all or start and then stop after a while by displaying a message.

Below is a list of messages and recommended actions to resolve faults. These messages are displayed on the C5.1 control panel, mobile app or a computer. Letter "A" marks critical alarms, letter "B" marks informational messages. If you can't find your fault code in the table, contact an authorized service representative.

Code	Message	Possible cause	User's actions
1B	Low supply air flow	1. Contaminated air filters. 2. Excessive resistance of the air duct system. 3. VAV air flow control selected but pressure sensors are not connected. 4. Supply air fan not working properly.	1. Check air filters and replace, if needed. 2. Check air dampers, air inlet/exhaust openings. 3. If VAV air flow control is required, install and connect duct-mounted pressure sensors. If VAV mode is not necessary – select CAV or DCV in the settings. 4. Contact authorised service.
2B	Low extract air flow	1. Contaminated air filters. 2. Excessive resistance of ducts. 3. VAV air flow control selected but pressure sensors are not connected. 4. Exhaust air fan not working properly.	1. Check air filters and replace, if needed. 2. Check air dampers, air inlet/exhaust openings. 3. If VAV air flow control is required, install and connect duct-mounted pressure sensors. If VAV mode is not necessary – select CAV or DCV in the settings. 4. Contact authorised service.
3B	VAV calibration fail	Not connected or faulty pressure sensors.	Check pressure sensors and their measuring range. If a sensor needs to be replaced, contact an authorized service representative.
4B	Change outdoor air filter	Contaminated outdoor air filters.	Replace the air handling unit filters and clear the message.
5B	Change extract air filter	Contaminated exhaust air filters.	Replace the air handling unit filters and clear the message.
6B-11B	Electric heater off	Electrical heater temperature has risen above 70 °C, because: 1. Supply air flow is too low at high heating demand. 2. Electric heater malfunctioning.	When the heater cools down, it will turn on again automatically. 1 a. Check air filters and air ducts. 1 b. Decrease the desired temperature. 1 c. Increase ventilation intensity. 2. Contact authorised service.
14B	Service time	Time for annual periodic maintenance.	Clear the message after performing periodic maintenance.
95B	Low heat exchanger efficiency	1. Heat exchanger efficiency decreased due to unfavourable temperature or humidity conditions. 2. One or two faulty temperature sensors inside the unit. 3. Air mixing between different flows.	1. Message will disappear automatically when the air temperature or humidity changes and efficiency increases. 2. Check the readings of the temperature sensors. If a sensor(s) needs to be replaced, contact an authorized service representative. 3. Check the unit door for tightness and all gaskets or sealant joints for wear.
112B	Water pump/ coil alarm	Signal from the water flow sensor or circulation pump received (see "Water flow monitoring function").	Check if there is enough water in the system and whether the circulation pump and water mixing valves are working.
113B, 114B	CF exchanger not calibrated	CF heat exchanger calibration not performed or not successful.	Check the unit door for tightness, check for obstacles in the duct system and check whether the air handling unit can reach the air volume specified in COMFORT 1 mode. Repeat calibration manually.
118B-119B	External sensor failure	Not connected or faulty air quality or humidity sensors	Check whether the sensor is connected. If a sensor needs to be replaced, contact an authorized service representative.
127B	Service mode	Temporary special operating mode that can only be activated by a service specialist.	If the unit has been previously repaired, contact the person who repaired the unit to make sure that the service mode can be disabled. Service mode is turned off by deleting a message.
1A, 2A	Supply air temp. sensor failure	Not connected or faulty supply air temperature sensor.	Check whether the sensor is connected. If a sensor needs to be replaced, contact an authorized service representative.
3A, 4A	Extract air temp. sensor failure	Not connected or faulty extract air temperature sensor.	Check whether the sensor is connected. If a sensor needs to be replaced, contact an authorized service representative.

UAB KOMFOVENT we reserve the right to make changes without prior notice

Code	Message	Possible cause	User's actions
5A, 6A	Outdoor air temp. sensor failure	Not connected or faulty outdoor air temperature sensor.	Check whether the sensor is connected. If a sensor needs to be replaced, contact an authorized service representative.
7A, 8A	Exhaust air temp. sensor failure	Not connected or faulty exhaust air temperature sensor.	Check whether the sensor is connected. If a sensor needs to be replaced, contact an authorized service representative.
9A, 10A	Water temp. sensor failure	Not connected or faulty return water temperature sensor.	Check whether the sensor is connected. If a sensor needs to be replaced, contact an authorized service representative.
11A	Return water temp. low	Return water temperature of the water heater dropped below the permissible limit.	Check the condition of a circulation pump and the heating system as well as operation of a mixing valve actuator. Check if hot water is available in the system.
12A	Internal fire alarm	1. Internal temperature is above 50°C 2. Faulty temperature sensor.	1. Locate the heat source in the ductwork or unit. 2. Contact authorised service.
13A	External fire alarm	A fire alarm received from the building's fire protection system.	Once fire alarm is resolved, the unit must be started using a control panel, computer or a smartphone.
14A	External stop	The unit stopped by an external device (button, timer, sensor).	Once the additional device is stopped, the unit will operate in normal mode.
15A	Heat exchanger failure	1. Rotary heat exchanger not rotating. 2. Air bypass damper of the counter-flow heat exchanger malfunctioning.	1. Check for foreign objects or debris preventing rotation of the rotor drum. Check if the rotor belt is not torn. 2. Contact authorised service.
16A	Heat exchanger icing	Freezing is possible at low outdoor temperatures and high indoor humidity.	Check the rotary heat exchanger actuator or counter-flow heat exchanger bypass damper for proper operation. Check if an external pre-heater is working, if used.
17A	Low supply air temperature	1. Integrated heaters not working. 2. Additional heating/cooling devices faulty or installed incorrectly. 3. Faulty air temperature sensor.	1. Contact authorised service. 2. Contact the company that installed or sold additional heating/cooling equipment. 3. Contact authorised service.
18A	High supply air temperature	1. Integrated heaters malfunctioning. 2. Additional heating/cooling devices malfunctioning or installed incorrectly. 3. Faulty air temperature sensor.	1. Contact authorised service. 2. Contact the company that installed or sold additional heating/cooling equipment. 3. Contact authorised service.
19A	Low supply air flow	1. Obstacle in the duct system. 2. VAV air flow control selected but pressure sensors are not connected. 3. Faulty supply air fan.	1. Check that the air dampers, air intake and exhaust openings are not blocked, check whether the adjustment valves are not completely closed. 2. If VAV air flow control is required, install and connect duct-mounted pressure sensors. If VAV mode is not necessary – select CAV or DCV in the settings. 3. Contact authorised service.
20A	Low extract air flow	1. Obstacle in the duct system. 2. VAV air flow control selected but pressure sensors are not connected. 3. Faulty exhaust air fan	1. Check that the air dampers, air intake and exhaust openings are not blocked, check whether the adjustment valves are not completely closed. 2. If VAV air flow control is required, install and connect duct-mounted pressure sensors. If VAV mode is not necessary – select CAV or DCV in the settings. 3. Contact authorised service.
21A-23A	Electric heater overheat	Electrical heater temperature has risen above 100°C, because: 1. Supply air flow too low at high heating demand. 2. Power failure during operation of the electric heater; the heater could not cool down. 3. Electric heater malfunctioning.	1 a. Check the air duct system, air intake and exhaust dampers, fan operation. 1 b. Decrease the desired temperature. 1 c. Increase ventilation intensity. 2. Check whether the unit is connected to the mains. 3. Contact authorised service. Once the fault is eliminated, reset an overheating protection fuse before restarting the unit. Look for a yellow sticker with the word "Reset" inside the unit that marks an overheating protection fuse.
31A-38A	Temperature sensor failure	One of the additional zone temperature sensors is faulty or not connected.	1. Check if the sensor is connected. If a sensor needs to be replaced, contact an authorized service representative. 2. Check whether the auxiliary temperature zone parameters are configured correctly (see Chapter "Functions" or "Additional zone control C5" of the Instruction Manual).
39A,40A	Return water temp. low	Return water temperature of the additional temperature zone water heater dropped below the permissible limit.	1. Check the condition of a circulation pump and the heating system as well as operation of a heating damper actuator. Check if hot water is in the system. 2. Check that the auxiliary temperature zone parameters are configured correctly (see Chapter "Functions" or "Additional zone control C5" of the Instruction Manual)
41A,42A	Supply air temp. sensor failure	Not connected or faulty temperature sensor inside the unit, measuring supply air temperature downstream the heat exchanger.	Check whether the sensor is connected. If a sensor needs to be replaced, contact an authorized service representative.

Code	Message	Possible cause	User's actions
43A,44A	External stop	The unit stopped by an external device connected to the additional zone module.	Once the additional device is stopped, the unit will run in a normal mode.
45A	Water pump/ coil alarm	Signal from the water flow sensor or circulatory pump received (see "Water flow monitoring function").	Check if there is enough water in the system and whether the circulation pump and water mixing valves are working.
46A	CF exchanger not calibrated	CF heat exchanger calibration failed, therefore, the heat exchanger is at risk of freezing.	Check the unit door for tightness, check for obstacles in the duct system and check whether the air handling unit can reach the air volume specified in COMFORT 1 mode. Repeat calibration manually.
90A	Service mode	C5 controller blocked.	Contact authorised service.
91A-98A	Controller failure	Faulty controller electronic or no connection between controller electronics.	1. Check if all wires and cables are connected between the unit sections. 2. Contact authorised service.
99A-103A	Supply fan failure	Supply air fan or frequency converter not working.	1. Check if all wires and cables are connected between the unit sections. 2. Check the fan circuit breakers. 3. Contact authorised service.
104A-108A	Exhaust fan failure	Exhaust air fan or frequency converter not working.	1. Check if all wires and cables are connected between the unit sections. 2. Check the fan circuit breakers. 3. Contact authorised service.
109A-113A	Rotor drive failure	Rotary heat exchanger motor or frequency converter not working.	1. Check if all wires and cables are connected between the unit sections. 2. Contact authorised service.
114A-124A	Communication error	Faulty controller electronic or no connection between controller electronics.	1. Check if all wires and cables are connected between the unit sections. 2. Contact authorised service.
125A,127A	Controller failure	Faulty C5 controller.	Contact authorised service.
126A	Controller failure	1. Improperly connected or defective external devices. 2. Faulty C5 controller.	1. Check connection of external devices or contact the representative of the installer. 2. Contact authorised service.

UAB KOMFOVENT we reserve the right to make changes without prior notice

APENDIX 1

FILTER INSPECTION AND REPLACEMENT

The pictures below show the location of filters on different models of devices. Because the devices are manufactured with the right and left access sides, and the images show only one access side, your device may look different from the one shown. Layout of filters and components presented in the "Installation Manual".

VERSO R 1000 U/H/V - 1300 U/H/V - 1500 U/H/V

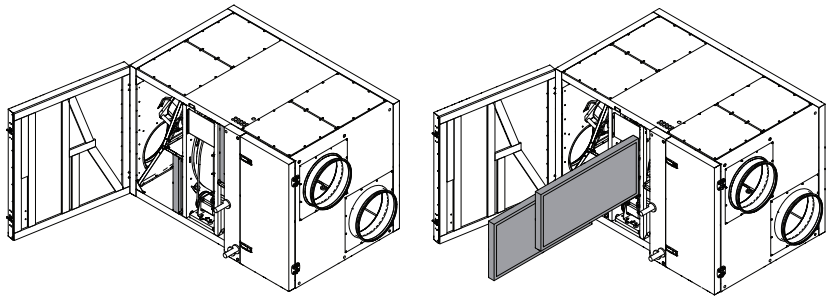

VERSO R 1000 F

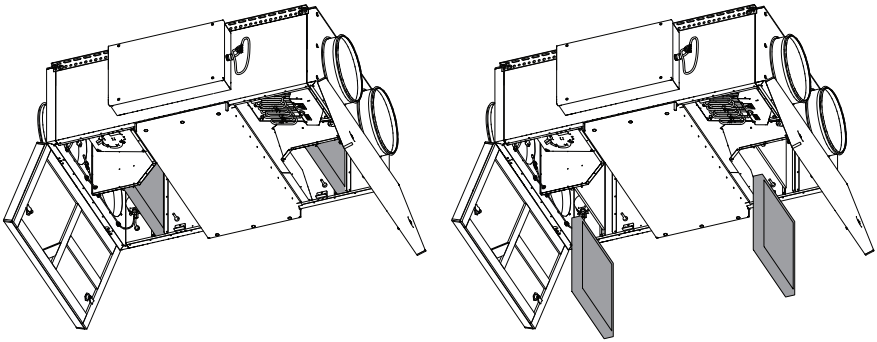

VERSO R 1000 FSA

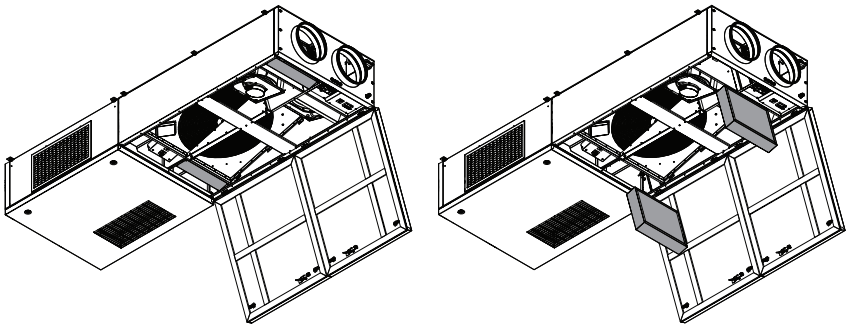

VERSO R 1300 F

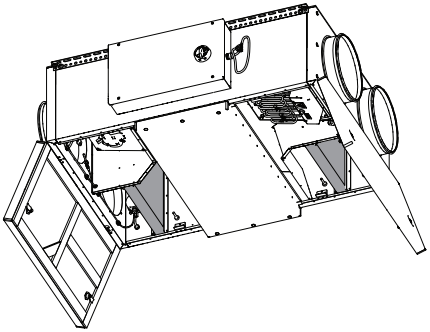

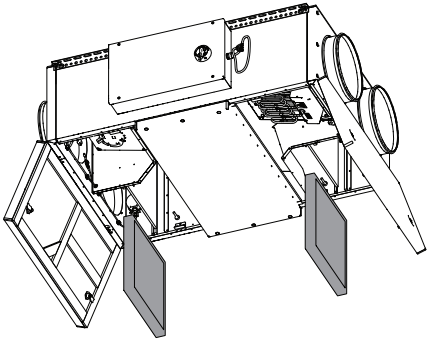

VERSO R 1500 F

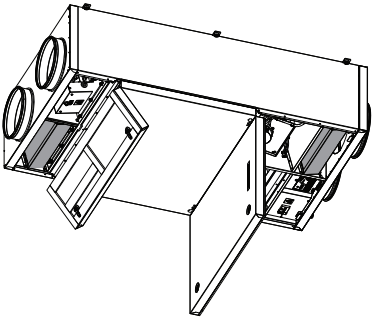

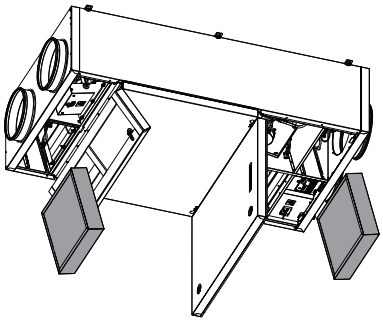

VERSO R 1700 U/H/V - 2000 U/H/V

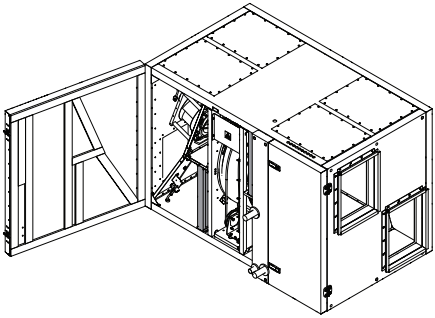

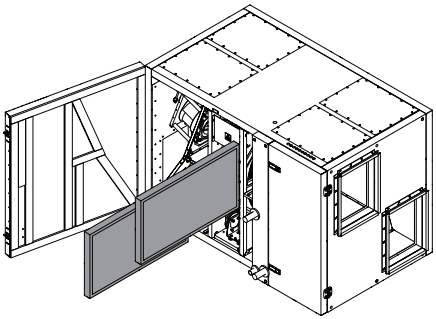

VERSO R 2000 F

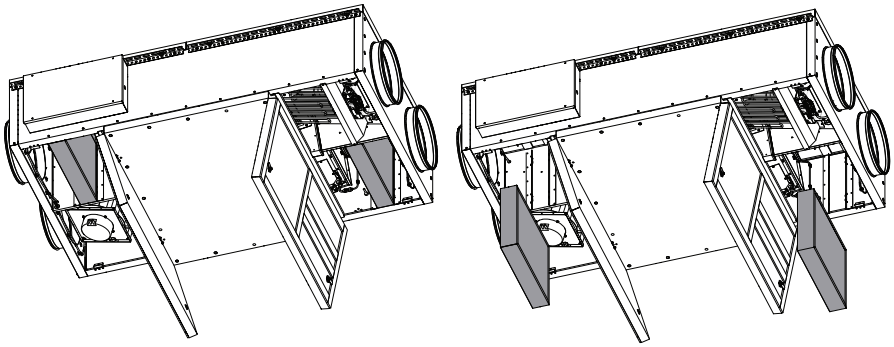

VERSO R 2500 V

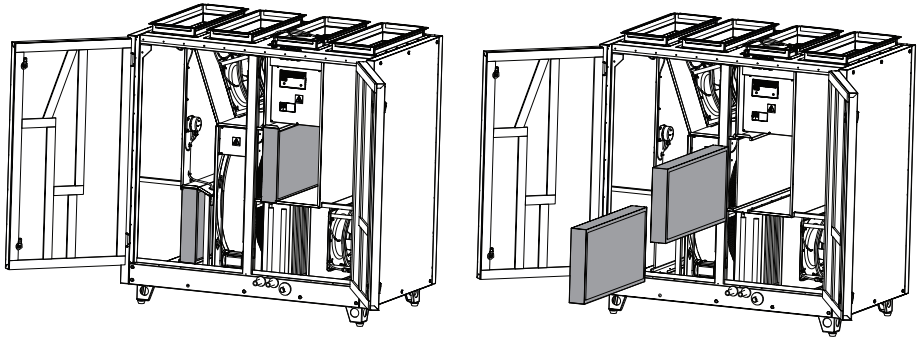

VERSO R 2500 H - 5000 H

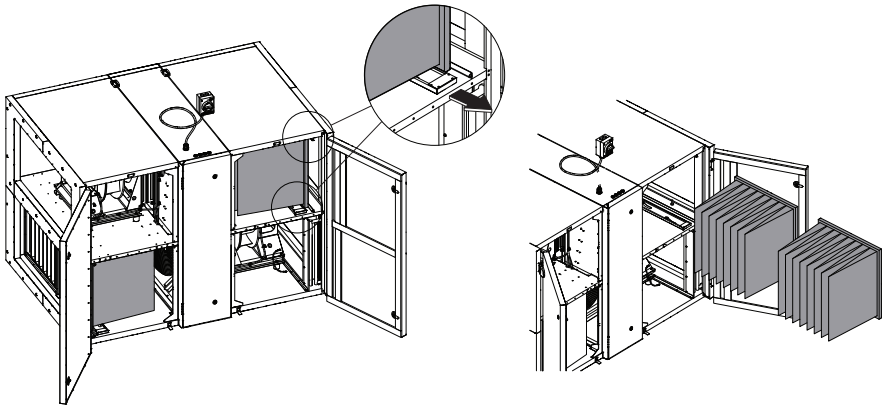

VERSO R 3000 U/H/V - 4000 U/H/V

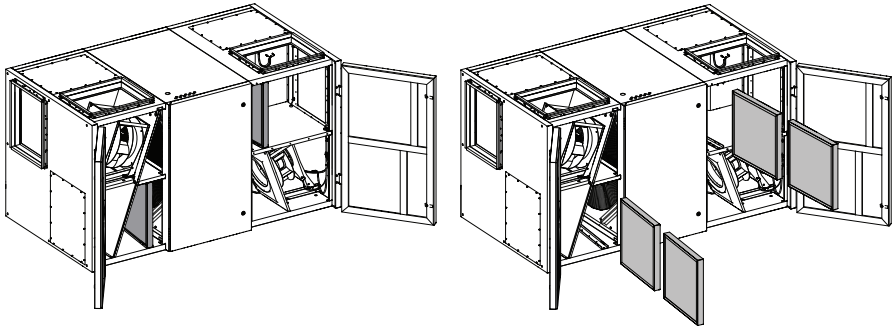

VERSO R 3000 F

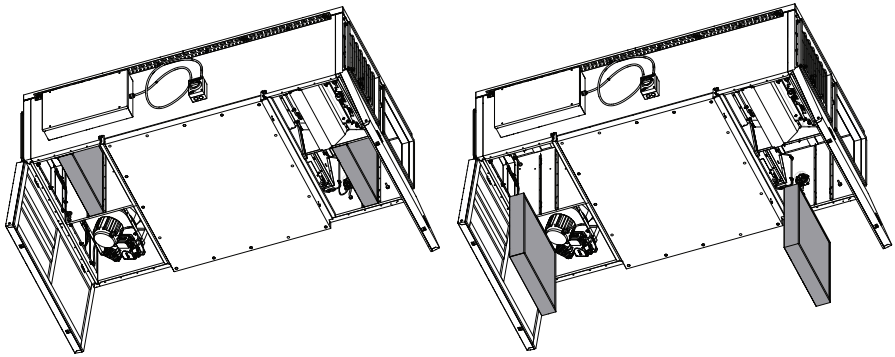

VERSO R 5000 V

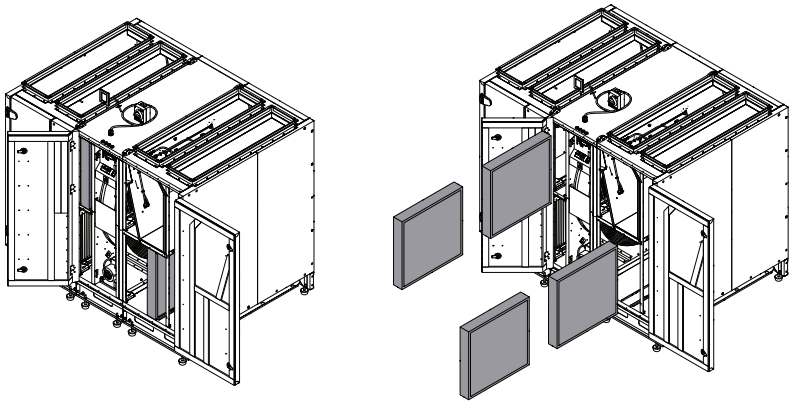

VERSO R 7000 H

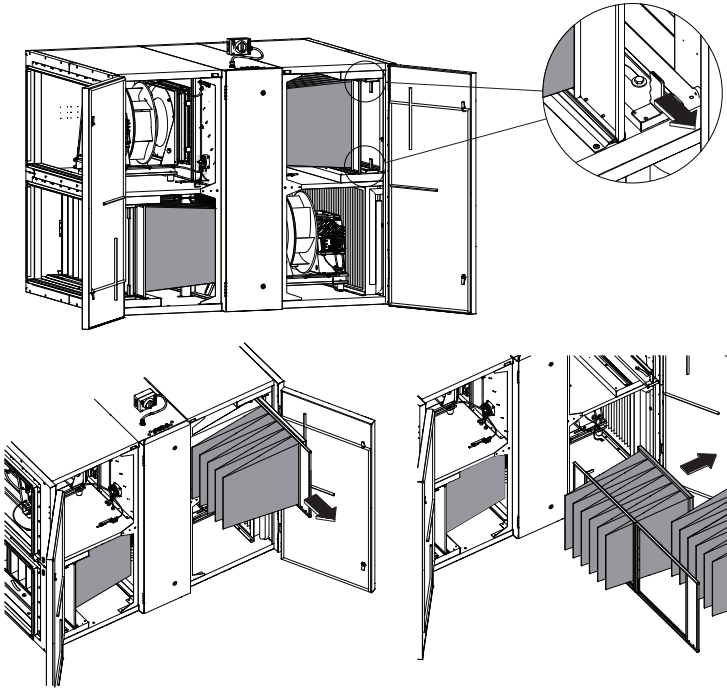

VERSO R 7000 V

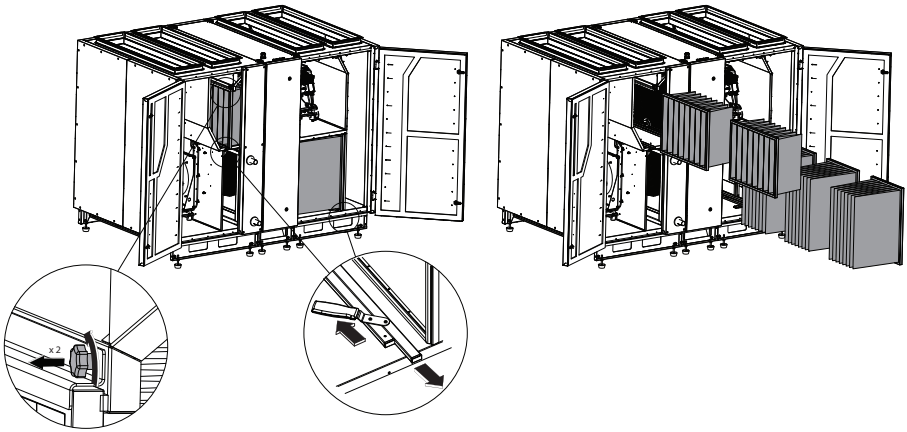

VERSO CF 1000 U/H/V - 1300 U/H/V - 1700 U/H/V

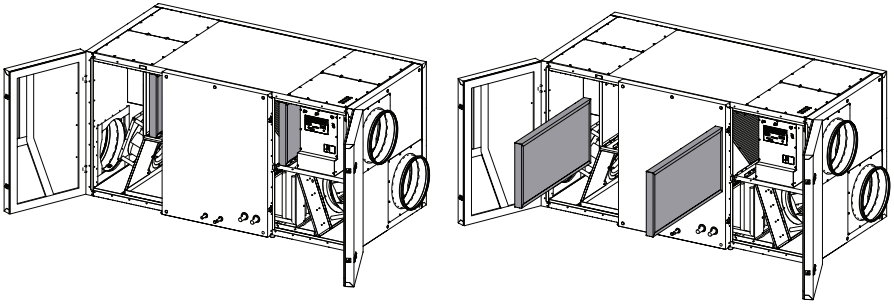

VERSO CF 1000 F[1]

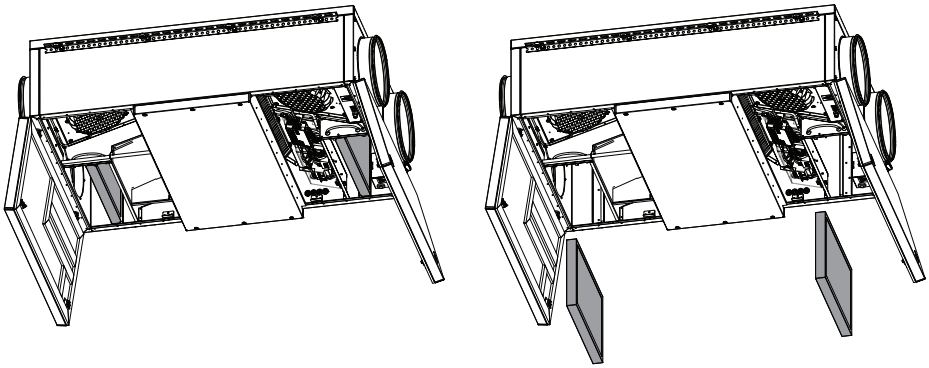

VERSO CF 1300 F - 1500 F

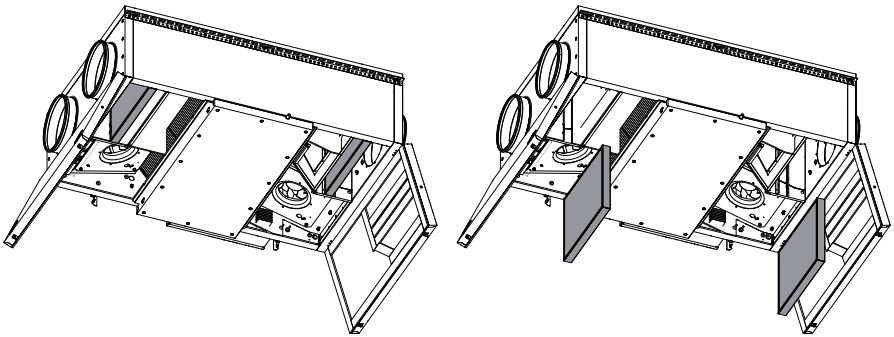

[1] Manufactured from 2025.11.04.

VERSO CF 2000 F

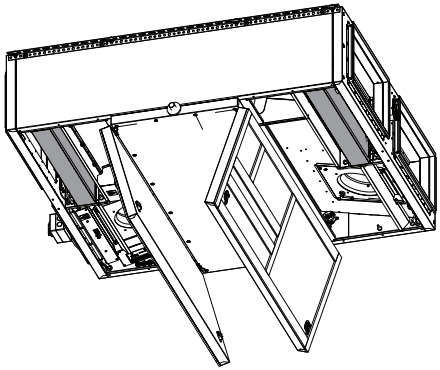

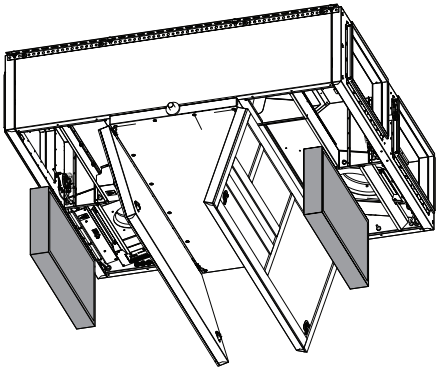

VERSO CF 2300 U/H/V

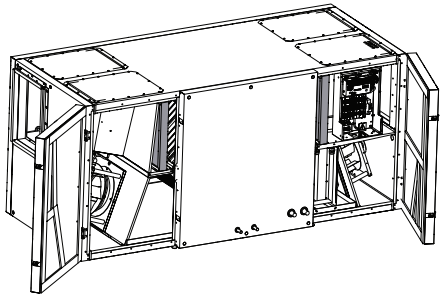

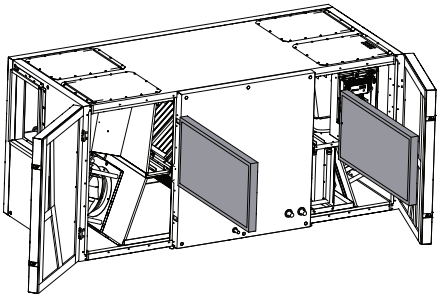

Verso CF 2500 V

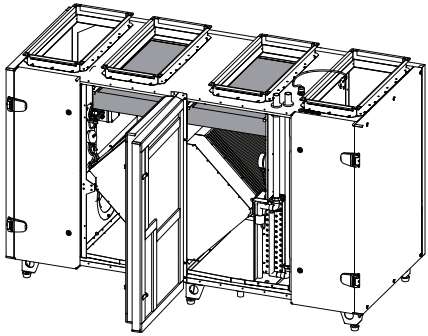

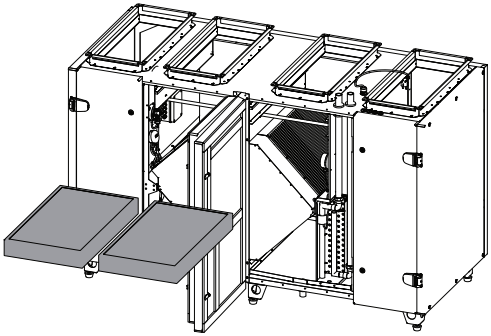

VERSO CF 2500 F

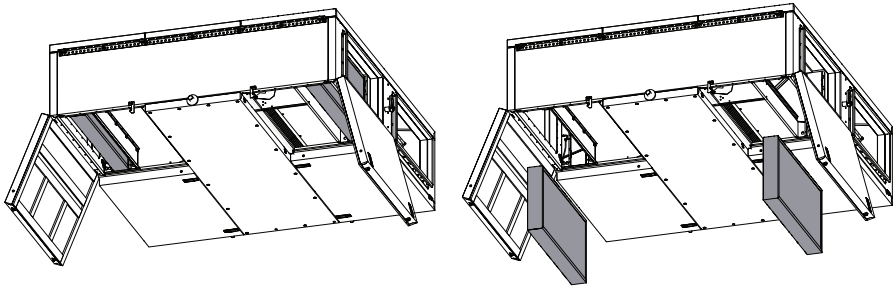

VERSO CF 3000 F

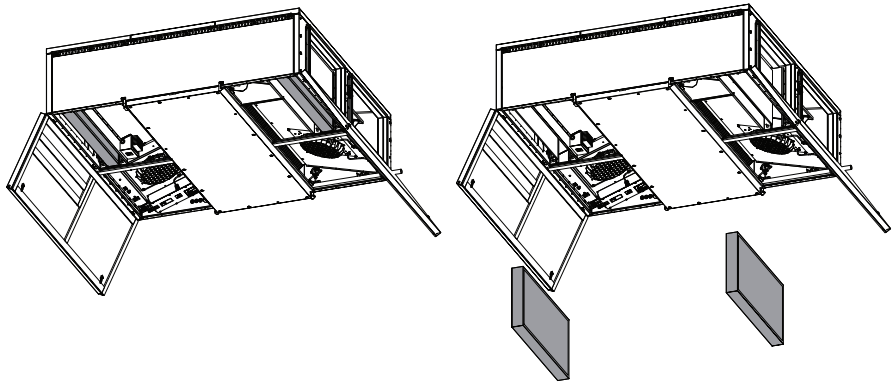

VERSO CF 3500 U/H/V

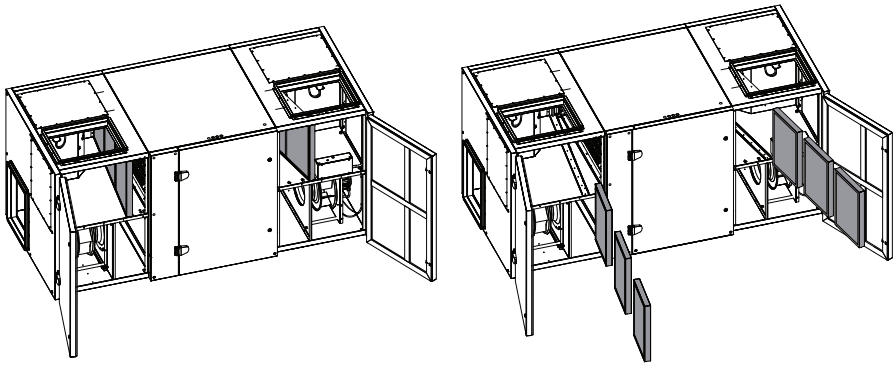

VERSO CF 5000 V

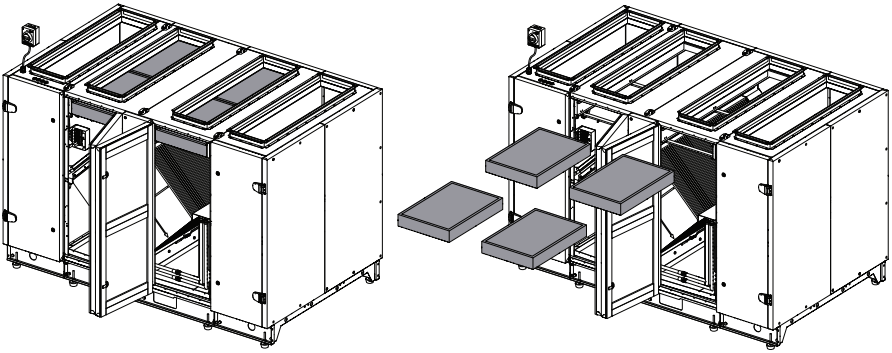

VERSO CF 5000 H

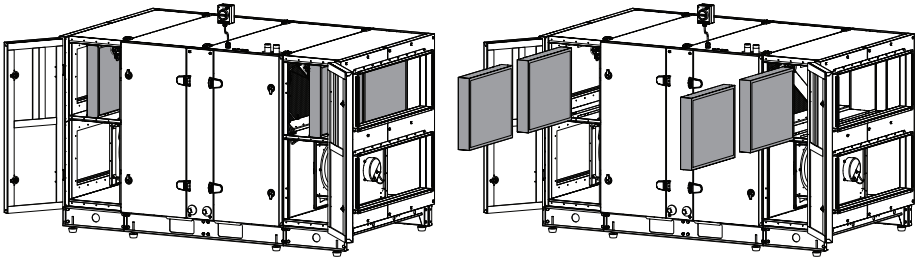

VERSO CF 7000 V

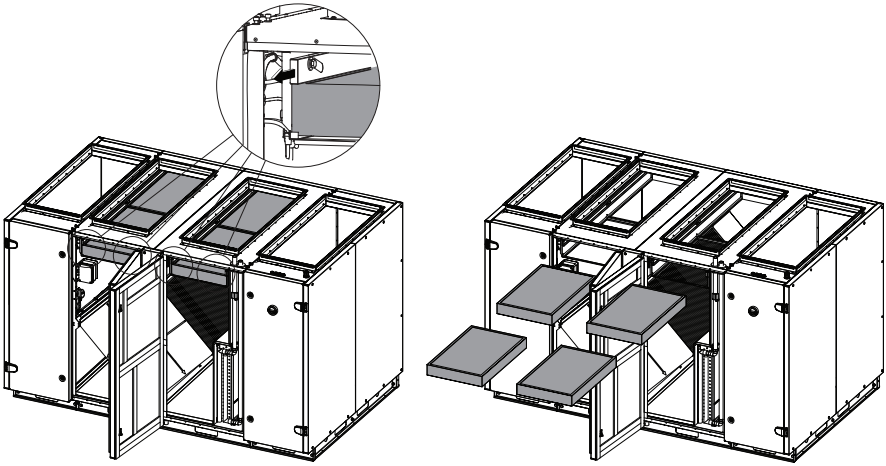

APENDIX 2

WARRANTY INFORMATION

Dear Customer,

KOMFOVENT thanks you for your choice. We are pleased that you have chosen us and will strive to ensure you are satisfied with your purchased product. To avoid misunderstandings, we kindly ask you to read the installation and operating instructions of the product carefully.

KOMFOVENT hereby confirms the obligations set by applicable consumer rights protection laws to fulfil consumer claims in case of detected product defects.

In case of any problems, we recommend immediately contacting the company that installed your ventilation unit, the company providing technical maintenance, or the nearest KOMFOVENT distributor branch. Please always note the device serial number. The device's serial number can be found on a sticker attached to the outside of the unit or on a plate mounted on the unit frame. Your claim will be registered and, if repair of the device is required, a representative will agree with you on a convenient arrival time. All repairs covered by the warranty will be carried out free of charge – with no charges for spare parts or labour.

Only an authorized representative can decide whether defective parts should be repaired or replaced with new ones. Replaced or repaired parts remain covered by the overall unit warranty. If repairs are performed after the end of the device's warranty period, the replaced or repaired parts are covered by a 6-month warranty.

The warranty covers all defects in the device arising from manufacturing or assembly faults. When operating the device under the conditions listed below, this warranty is valid from the product purchase date. If the purchase date is unknown, the warranty is calculated from the manufacturing date.

NORMAL OPERATING CONDITIONS

1. The devices must be protected from direct water ingress (rain or snow) and the effects of chemicals or be of special configuration intended for outdoor and/or aggressive environments.

2. The ambient temperature must be from -30 °C to +40 °C (if the unit wall thickness is at least 45 mm) or from 0 °C to +30 °C (if the unit wall thickness is at least 20 mm); exhaust air temperature – from +10 °C to +40 °C; relative air humidity – from 20% to 80%, non-condensing. The ratio of temperature and humidity must not exceed condensation conditions, i.e., condensation must not form on the inner or outer walls of the unit.

3. When starting equipment in new buildings or renovated premises during the autumn-winter season, the exhaust air humidity often exceeds normal operating conditions, and due to dust from construction materials, air filters may become clogged immediately after startup. It is recommended to dry and ventilate the premises before starting the ventilation equipment.

4. The ventilation unit must be periodically inspected (recommended interval – every 4 months): filters and heat exchangers checked for contamination, moving parts and belts checked. Air filters must be replaced at least once per year (recommended twice per year – before and after the heating season).

5. In the case of an extended warranty, periodic inspection of the unit must be performed at least twice a year throughout the entire warranty period, and the results must be recorded. Periodic inspections may only be performed by qualified specialists or a KOMFOVENT representative.

6. It is advisable not to switch off the ventilation unit; when ventilation is not required, reduce the intensity to the minimum.

7. System balancing must be performed before operating the ventilation unit.

KOMFOVENT representative reserves the right to refuse free warranty maintenance services if the following conditions are not met.

WARRANTY CONDITIONS

1. The warranty does not apply in the following cases:
   1.1. If the product usage or operating conditions, as specified in the installation and operating instructions, are violated;
   1.2. If the storage conditions of the unit are violated;
   1.3. If there are signs indicating attempts of unqualified repair;
   1.4. If the unit's construction has been altered;
   1.5. If the unit is used for purposes other than its direct intended use;
   1.6. If the device serial number on the attached plate or sticker has been changed, removed, or is impossible to identify;
   1.7. If the unit is installed not according to the manufacturer's installation instructions, has no space left for maintenance, or is installed in a location difficult to access;
   1.8. For noise, vibration, or colour changes arising from normal wear of the unit or its components.

2. The warranty does not apply to device malfunctions that occur due to:
   2.1. Damage to the unit caused by improper transportation or installation errors;
   2.2. Mechanical damage;
   2.3. Damage caused by foreign objects, materials, liquids, or condensation entering the device, except when this occurs due to a design flaw;
   2.4. Damage resulting from natural disasters, fire, domestic factors, accidental external effects (voltage fluctuations in the electrical network, lightning, etc.), or accidents.

3. Warranty service is not provided in cases where it is necessary to replace operating parts (filters, fuses).

4. Preparatory work required to access the unit and perform quality repairs, such as removal of furniture, walls, partitions, ceilings, ducts, plumbing, equipment from other manufacturers, or other obstructing items, is not considered warranty service. KOMFOVENT representatives have the right to refuse to perform such work.

5. The warranty does not cover additional fluids used in ventilation systems, such as heat exchanger filling fluids, in the event of leakage.

6. The warranty does not cover additional losses attributable to device failure, such as inconvenience, transportation expenses, phone calls and accommodation, personal or business losses, loss of salary or income.

7. KOMFOVENT is not responsible for direct or indirect damage caused by KOMFOVENT products to people, pets, or property if the cause of such damage is failure to comply with the unit's usage and installation rules and conditions, intentional or negligent actions of users or third parties.

Since great attention is paid to product quality, we welcome your feedback, comments, or suggestions regarding the technical and operational properties of the equipment.

SERVICE AND SUPPORT

LITHUANIA
UAB KOMFOVENT
Phone: +370 5 200 8000
service@komfovent.com
www.komfovent.com

FINLAND
Komfovent Oy
Muuntotie 1 C1
FI-01 510 Vantaa, Finland
Phone: +358 20 730 6190
toimisto@komfovent.com
www.komfovent.com

GERMANY
Komfovent GmbH
Konrad-Zuse-Str. 2,
42551 Velbert, Deutschland
Phone: +49 0 2051 6051180
info@komfovent.de
www.komfovent.de

LATVIA
SIA Komfovent
Bukaišu iela 1, LV-1004 Riga, Latvia
Phone: +371 24 66 4433
info.lv@komfovent.com
www.komfovent.com

SWEDEN
Komfovent AB
Ögärdesvägen 12A
433 30 Partille, Sverige
Phone: +46 31 487 752
info_se@komfovent.com
www.komfovent.se

UNITED KINGDOM
Komfovent Ltd
Unit C1 The Waterfront
Newburn Riverside, Newcastle upon Tyne NE15 8NZ, UK
Phone: 0191 429 4503
info_uk@komfovent.com
www.komfovent.com

PARTNERS

AT	J. PICHLER Gesellschaft m. b. H.	www.pichlerluft.at
BE	Ventilair group	www.ventilairgroup.com
	ACB Airconditioning	www.acbairco.be
CZ	REKUVENT s.r.o.	www.rekuvent.cz
CH	WESCO AG	www.wesco.ch
	SUDCLIMATAIR SA	www.sudclimatair.ch
	CLIMAIR GmbH	www.climair.ch
DK	Øland A/S	www.oeland.dk
EE	BVT Partners	www.bvtpartners.ee
FR	ATIB	www.atib.fr
HR	Microclima	www.microclima.hr
HU	AIRVENT Légtechnikai Zrt.	www.airvent.hu
	Gevent Magyarország Kft.	www.gevent.hu
	Merkapt	www.merkapt.hu
IE	Lindab	www.lindab.ie
IR	Fantech Ventilation Ltd	www.fantech.ie
IS	Blikk & Tækniþjónustan ehf	www.bogt.is
	Hitataekni ehf	www.hitataekni.is
IT	ICARIA	www.icaria.srl
NL	Vent-Axia B.V	www.vent-axia.nl
	DECIPOL-Vortvent	www.vortvent.nl
	ForClima BV	www.forclima.nl
NO	Ventilution AS	www.ventilution.no
	Ventistål AS	www.ventistal.no
	Thermo Control AS	www.thermocontrol.no
PL	Ventia Sp. z o.o.	www.ventia.pl
SE	Nordisk Ventilator AB	www.nordiskventilator.se
SI	Agregat d.o.o	www.agregat.si
SK	TZB produkt, s.r.o.	www.tzbprodukt.sk
UA	TD VECON LLC	www.vecon.ua