komfovent

RHP STANDARD

INSTALLATION MANUAL

en

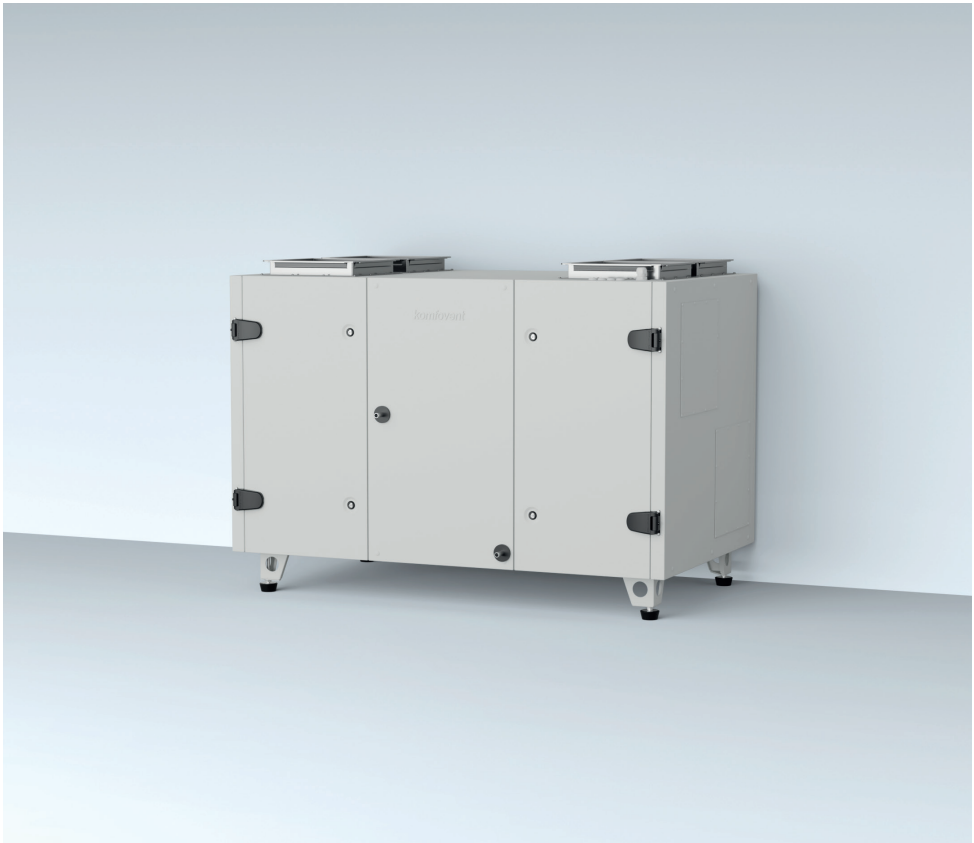

CONTENT

1. INTRODUCTION **4**
1.1. Safety Requirements 4
1.2. Unit designs and sizes 4
1.2.1. Integrated heat pump 5
1.2.2. Unit types by duct connections 7
1.2.3. Unit types by inspection sides 8
1.3. Unit components 8
2. UNIT TRANSPORTATION AND STORAGE **11**
3. MECHANICAL INSTALLATION **12**
3.1. Requirements for Mounting Location and Installation Base 12
3.2. Inspection Area 14
3.3. Duct system installation 15
3.4. Connection of external heating/cooling units 16
3.5. Connection of a Condensate Drain 17
3.6. Outdoor Units 18
4. TECHNICAL INFORMATION **18**
5. UNIT DIMENSIONS **19**
5.1. Horizontal units 19
5.2. Vertical units 19
6. ELECTRICAL INSTALLATION **20**
6.1. Requirements for Electrical Connection 20
6.2. Connection of Electrical Components 20
6.3. Control Panel Installation 23
6.4. Connecting the Unit to the Local Computer Network or the Internet 24
7. FILTERS **26**
8. COMMISSIONING AND INSPECTION OF THE UNIT **27**
8.1. Control panel C5.1 27
8.2. Starting the Unit With a Computer 29
8.3. Quick Inspection 31
APENDIX NO.1. WARRANTY INFORMATION **32**

1. INTRODUCTION

This Installation Manual is intended for professionals, qualified to install RHP Standard air handling units. Qualified professionals are people with sufficient professional experience and knowledge of ventilation systems and installation thereof, knowledge of electrical safety requirements and having ability to perform works without endangering themselves or others.

See the KOMFOVENT website for user manuals.

1.1. Safety Requirements

To avoid misunderstandings, read this Instruction Manual carefully before installing air-handling unit.

Only a qualified professional in accordance with the manufacturer's instructions and applicable legal acts and safety requirements may install air-handling units. An air handling unit is an electrical-mechanical device that contains electrical and moving parts, therefore, disregarding instructions of this manual will void the manufacturer's warranty and may also cause direct damage to property or human health.

- **Before starting any tasks, make sure that the unit is unplugged from the mains.**
- **Use caution when performing works near internal or external heaters as their surfaces may be hot.**
- **Do not connect the unit to the mains unless all the external assemblies are installed completely.**
- **Do not connect the unit to the mains in case of any visible damage incurred during transportation.**
- **Do not leave foreign objects and tools inside the unit.**
- **It is forbidden to operate air-handling units in areas with potentially explosive atmospheres.**
- **Heat pump system is filled with refrigerant (F-gas), therefore only qualified refrigeration systems' specialists or "Komfovent" representative can perform any mechanical/electrical works on a heat pump.**
- **Temperature of evaporating refrigerant is very low and causes severe frostbite in contact with skin, therefore use appropriate safety equipment (gloves, goggles).**

This symbol indicates that this product may not be disposed of with your household waste as specified in WEEE Directive (2002/96/EC) and national laws. This product should be handed over to a designated collection point or to an authorised collection site for recycling waste electrical and electronic equipment (EEE). Improper handling of this type of waste could have a negative impact on the environment and human health due to potentially hazardous substances that are generally associated with electrical and electronic equipment. At the same time, your cooperation in the correct disposal of this product will contribute to the effective usage of natural resources. For more information about where you can drop off your waste equipment for further recycling, contact your city authorities, waste management organisations, approved WEEE scheme or your household waste disposal service.

1.2. Unit designs and sizes

An air-handling unit is a device designed to ensure good ventilation in the premises. An air- handling unit removes indoor air containing carbon dioxide, various allergens or dust, while replacing it with filtered fresh air from outside. As the outside air is usually colder or warmer than the air within the premises, an integrated recuperator (heat exchanger) collects thermal energy from the indoor air and transfers the majority of it to the supply air.

RHP – air handling units with a rotary heat exchanger and an integrated heat pump. Rotating wheel (rotor) of a rotary heat exchanger collects heat or cold from the indoor air and transfers it to the fresh supply air. Recovered heat/cold capacity is changed by adjusting the rotor speed. When heat recovery is not required, the wheel stops. If a heat exchanger alone is not capable of reaching a desired temperature, an integrated heat pump is activated. If heating/cooling capacity is still too low, additional heaters or coolers may be activated.[1]

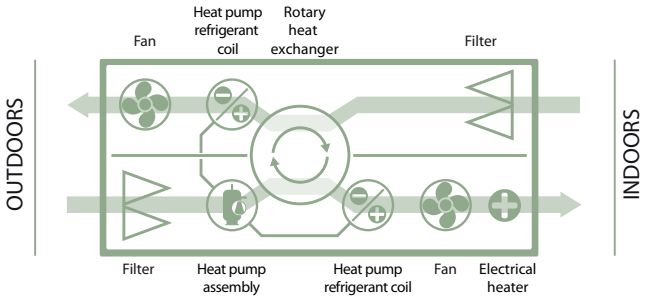

[1] Depends on configuration.

UAB KOMFOVENT we reserve the right to make changes without prior notice

Heat exchangers and heaters (or coolers) are designed to compensate for heat/cool losses during ventilation, therefore, we do not recommend using this unit as the main heating/cooling source. The unit may fail to reach a user-defined supply air temperature when the actual temperature in the premises differs significantly from the temperature set point, since this will lead to inefficient operation of a heat exchanger.

RHP STANDARD air handling units are manufactured in different sizes and various air flow ranges (from 400 to 1500 m³/h).

1.2.1. Integrated heat pump

All RHP Standard air-handling units are equipped with an integrated heat pump operating both in heating and cooling modes. A heat pump assembly consists of a piping system containing refrigerant, compressor, two radiators (condenser and evaporator) and separate control electronics:

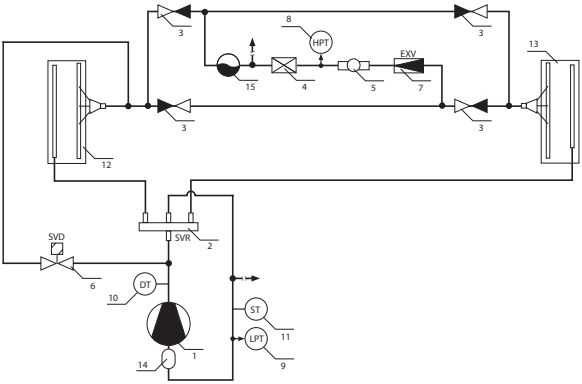

1. Compressor
2. 4-way valve (SVR)
3. Check valve
4. Electronic expansion valve (EXV)
5. High pressure transmiter (HPT)
6. Low pressure transmiter (LPT)
7. Filter-dryer
8. Sight glass
9. Defrost valve (SVD)
10. Discharge gas temperature sensor (DT)
11. Suction gas temperature sensor (ST)
12. Refrigerant coil positioned in the extract airflow
13. Refrigerant coil positioned in the supply airflow
14. Buffer tank
15. Liquid receiver

Fig. 1. Heat pumps hydraulic diagram

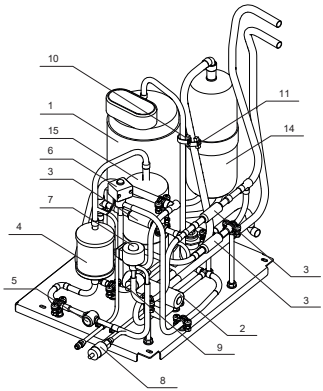

Fig. 2. Heat pump assembly

1. Compressor
2. 4-way valve
3. Check valve
4. Filter - dryer
5. Sight glass
6. Defrost valve
7. Electronic expansion valve (EXV)
8. High pressure transmiter (HPT)
9. Low pressure transmiter (LPT)
10. Discharge gas temperature sensor (DT)
11. Suction gas temperature sensor (ST)
12. Refrigerant coil positioned in the extract airflow
13. Refrigerant coil positioned in the supply airflow
14. Buffer tank
15. Liquid receiver

Heat pump model and exact refrigerant load capacity is stated on the sticker, that can be found inside of AHU:

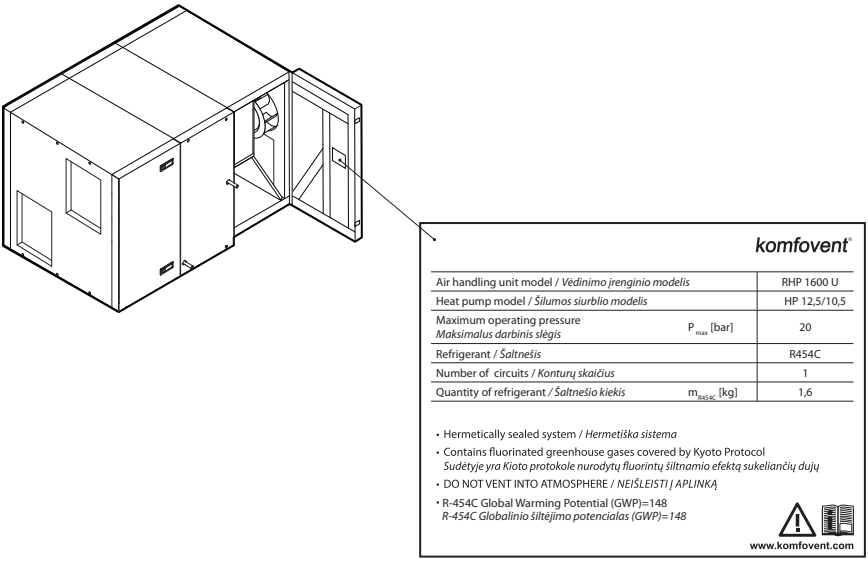

Fig. 3. Example of a heat pump's information label

Heat pump is activated automatically when a rotary heat exchanger is unable to reach desired temperature; and is switched off as soon as desired temperature is reached. Frequent starting and stopping of a heat pump may damage compressor, therefore, when heating/cooling demand is low, the heat pump will continue running for some time after the set temperature has been reached. In such cases, supplied air may be slightly warmer (in heating mode) or cooler (in cooling mode) than desired; however, the extracted temperature control mode will help to reduce such temperature fluctuations (see "User Instructions").

A certain airflow is required to ensure proper operation of a heat pump, i. e. to ensure efficient heat exchange and maintain refrigerant pressure within limits. When airflow drops below a minimum limit, a heat pump temporarily stops. Operation is resumed only when airflow increases. The table below shows the minimum airflows required for heat pump operation that must be taken into account when designing the ventilation system and selecting additional functions:

Unit model	Minimum air flow
RHP 450 V	90
RHP 700 V	150
RHP 900 V	180
RHP 900 H	180
RHP 1200 U	260
RHP 1600 U	340
RHP 2500 V	540

Heat pump is not operating when outdoor air temperature is between 15°C and 20°C, as, in this case, the rotary heat exchanger is usually capable of reaching desired air temperature.

If heating/cooling demand increases when the heat pump is switched off, additional heaters/coolers are activated[1].

When the heat pump is running, we recommend operating air handling units with the smallest possible air volume difference between the supply and extract airflows. In case of high flow imbalances (>20%), capacity and efficiency of the heat pump decreases, therefore the compressor operates at a critical refrigerant pressure limit. This results in reduced operating life and increased probability of failure.

[1] Depends on configuration.

UAB KOMFOVENT we reserve the right to make changes without prior notice

During winter operation, when the heat pump is in heating mode, condensate on the evaporator starts freezing and forms frost. Large ice deposits block airflow in the evaporator and may damage the heat pump. Therefore, the evaporator is automatically defrosted during winter use. When the outdoor temperature drops below zero, the heat pump automation system starts constantly monitoring pressure difference upstream and downstream the evaporator heat exchanger. When condensate accumulates in heat exchanger plates and ice starts to form, pressure increases and defrosting actions are initiated. During the defrost cycle, part of the hot refrigerant gas is directed from the compressor to the evaporator to melt forming ice crystals, therefore supply air temperature temporarily drops. Integrated electric or auxiliary heaters are switched on to compensate for this change. As soon as frost melts and pressure decreases, all the power of the heat pump is redirected to the heating process.

1.2.2. Unit types by duct connections

Depending on the installation and connection of the ducts, the air handling units are divided into:

- **Vertical units** (marked by the letter V) – when all ducts are connected at the top of the unit.
- **Horizontal units** (marked by the letter H) – when all ducts are connected on the sides of the unit.
- **Universal units** (marked by the letter U) – which duct connections can be relocated from the sides of the unit to the top and vice versa. Each universal unit has 16 different duct layout options that are easy to change during installation, depending on the intended installation location.

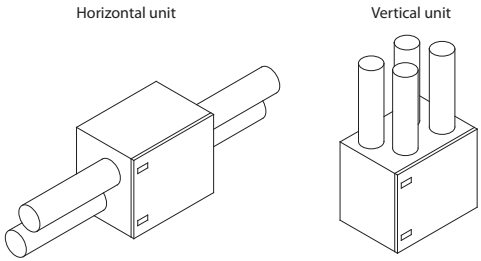

Fig. 4. Classification of units by duct connection

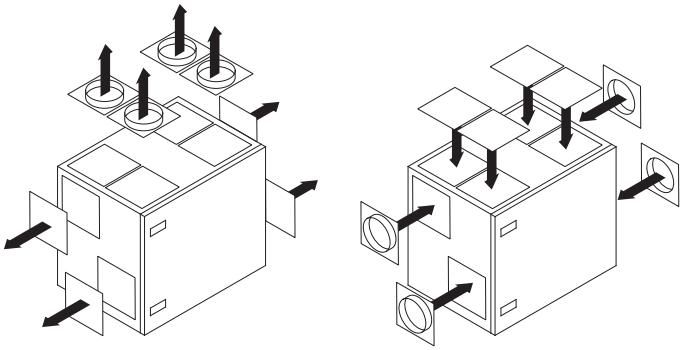

Fig. 5. Relocation of duct connections of the universal units

1.2.3. Unit types by inspection sides

Also, each unit may be left or right inspection side[1]. The inspection side indicates which side of the unit contains the air supply duct to the premises. The exact arrangement of the duct connections for the different inspection sides can be found in section "Unit components".

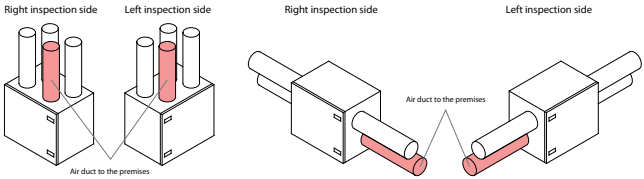

Fig. 6. Classification of units by inspection side

1.3. Unit components

Below are the principal diagrams of air handling units, including the marking of assemblies of the unit and the arrangement of the duct connections.

RHP 450 V - 700 V - 900 V

Left inspection side L1

Right inspection side R1

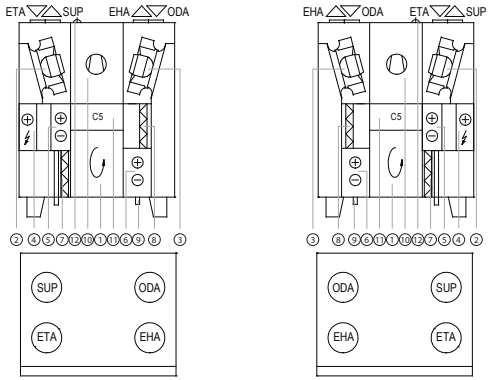

ODA – outdoor air

SUP – supply air

ETA – extract air

EHA – exhaust air

1 – Rotary heat exchanger
2 – Supply air fan
3 – Extract air fan
4 – Electrical heater
5 – Supply air refrigerant coil
6 – Exhaust air refrigerant coil
7 – Outdoor air filter
8 – Indoor air filter
9 – Condensate drainage
10 – Heat pump assembly
11 – Main board of the C5 control panel
12 – Main power cable location

[1] Depends on your order.

RHP 900 H

Left inspection side L1

Right inspection side R1

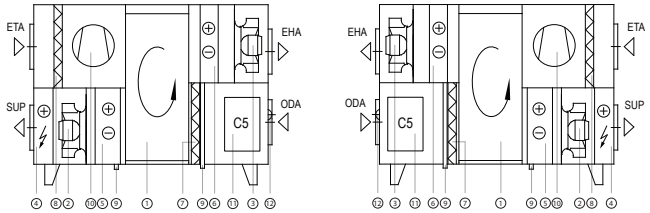

RHP 1200 UH - RHP 1600 UH

Left inspection side L1

Right inspection side R1

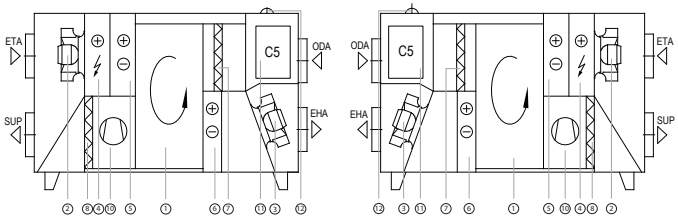

RHP 1200 UV - RHP 1600 UV

Left inspection side L1

Right inspection side R1

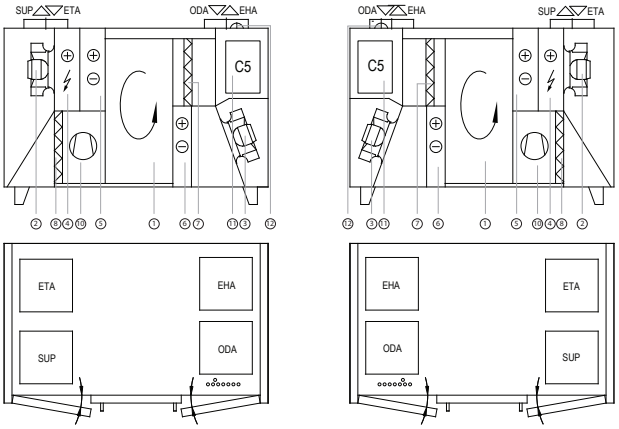

ODA – outdoor air

SUP – supply air

ETA – extract air

EHA – exhaust air

1 – Rotary heat exchanger
2 – Supply air fan
3 – Extract air fan
4 – Electrical heater
5 – Supply air refrigerant coil
6 – Exhaust air refrigerant coil

7 – Outdoor air filter
8 – Indoor air filter
9 – Condensate drainage
10 – Heat pump assembly
11 – Main board of the C5 control panel
12 – Main power cable location

RHP 2500 V

Left inspection side L1

Right inspection side R1

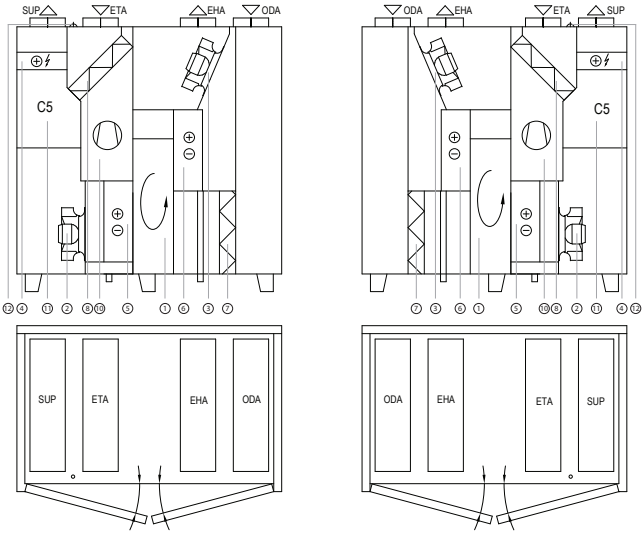

ODA – outdoor air

SUP – supply air

ETA – extract air

EHA – exhaust air

1 – Rotary heat exchanger
2 – Supply air fan
3 – Extract air fan
4 – Electrical heater
5 – Supply air refrigerant coil
6 – Exhaust air refrigerant coil

7 – Outdoor air filter
8 – Indoor air filter
9 – Condensate drainage
10 – Heat pump assembly
11 – Main board of the C5 control panel
12 – Main power cable location

2. UNIT TRANSPORTATION AND STORAGE

Equipment must be transported and stored in the original packaging. During transportation, equipment must be properly secured and further protected against possible mechanical damage, rain or snow.

Forklift truck or crane can be used for loading or unloading. For the crane operation, special lashes or ropes must be used to securing them in the designated areas. Ensure that lifting lashes or ropes do not crush or otherwise damage the housing of the unit. We recommend using special belt supports. When lifting and transporting the equipment with a forklift, the forks must be long enough to prevent the unit from being overturned or mechanically damaging its bottom side. Air handling units are heavy, therefore, be careful during lifting, moving or transportation. Use personal protective equipment. Even small units should be transported on a forklift, a trolley or carried by multiple persons.

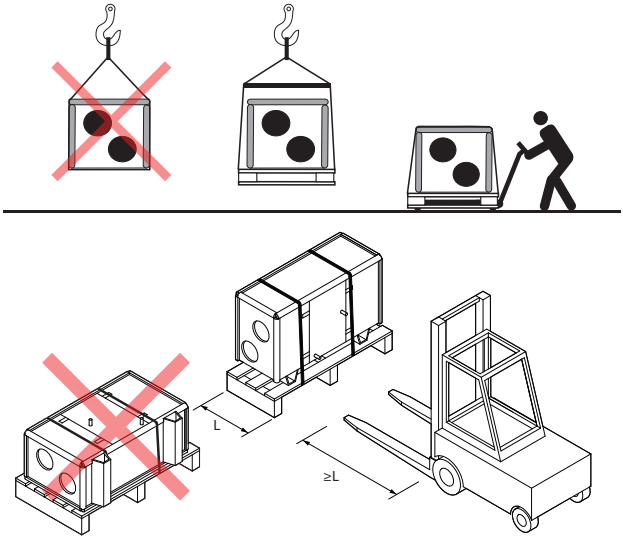

Fig. 7. Examples of transportation by crane, forklift and trolley

When lifting air handling units, pass the lifting straps, ropes or additional crossbars through the holes in the mounting frame and/or pass them under the unit. Do not attach lifting equipment directly to the mounting frame or unit's legs, as parts of it may bend and the load may fall.

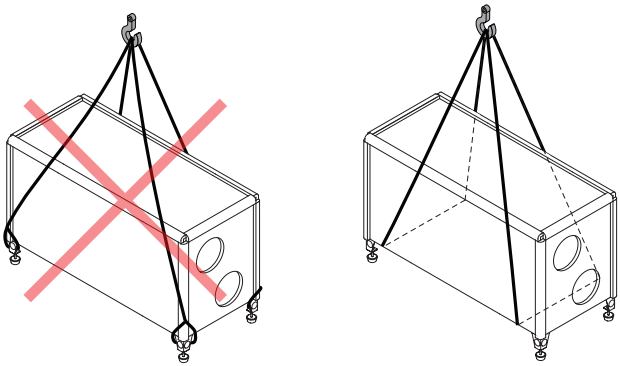

Fig. 8. Transport by crane

After delivery of the air handling unit, carefully inspect its packaging for damage. If mechanical or other damage is visible (e.g., wet cardboard packaging), notify the carrier immediately. If the damage is significant, do not accept the unit. Inform the selling company or the representative of UAB KOMFOVENT within three business days about any damage detected during delivery.[1]

Units should be stored in a clean, dry room at a temperature of 0-40 °C. When selecting a storage location, make sure the unit is not accidentally damaged, that other heavy objects are not loaded on top and dust or moisture does not get inside the unit.

- **Air handling units are heavy, therefore care must be taken during lifting, carrying or moving operations. Use personal protection equipment, do not stand under a suspended unit or a part thereof.**
- **Only an employee qualified to operate a forklift truck or crane and familiar with the principles of cargo lifting and safety requirements, must perform unloading or lifting operations.**
- **It must be ensured that the casing is not crushed or otherwise damaged by straps or ropes during lifting operations. Use of special supporting structures (traverses) is recommended.**
- **When lifting the unit or section thereof, note that their center of gravity may differ from the geometric center of the load.**
- **Mounting of separate air handling units in stacks is not allowed unless it's construction design is intended for such installation.**
- **Before installation AHU must be stored in clean and dry premises in their original packaging. If the unit is installed but not yet in use, all connection openings must be tightly closed and the unit must be additionally protected against environmental influences (dust, rain, cold, etc.).**

3. MECHANICAL INSTALLATION

3.1. Requirements for Mounting Location and Installation Base

RHP Standard air handling units are designed for ventilation of medium or large commercial or industrial premises (e.g., stores, offices, hotels, etc.) where standard air temperature and humidity is maintained. These units are not intended for transporting solid particles within air flows. Standard equipment air handling units are intended for indoor installation; and with additional accessories, these units may be mounted outdoors[2]. Air handling units are designed for ambient temperatures from -30 °C to +40 °C.

- **RHP Standard units are not intended for operation in areas with potentially explosive atmospheres. Air handling units are not designed for ventilation and dehumidification of wet areas (pools, saunas, car washes, etc.).**
- **If the AHU is installed in a room with high humidity level, condensate may form on the walls of the unit at low outdoor temperatures.**

An air handling unit must be mounted on a relatively large and sturdy base, based on the weight of the unit and in accordance with building regulations. Base must be made of reinforced concrete or metal structures. If the unit is not equipped with adjustable height feet, it must be installed on a flat and level base. It is recommended to fit vibration dampening gaskets between the unit and installation base.

The outdoor air handling units must be fixed to the installation base (e.g., metal angle pieces with rubber vibration dampening gaskets).

Units installed on such base must be levelled in respect to the horizon – deviations shall not exceed 0.3mm for 1m in the longitudinal direction and 0.5mm for 1m in the transverse direction.

[1] UAB KOMFOVENT is not responsible for losses caused by the carrier during transportation and unloading.
[2] Except units, with vertical duct connections.

If the installation base is uneven, it is recommended to install the unit on additionally assembled straight metal structures or use adjustable feet, which are supplied with the unit. The air handling units and its separate sections are manufactured with a factory-assembled installation frame or mounting legs (see the "Unit Components" section), to which adjustable feet can be attached if necessary.

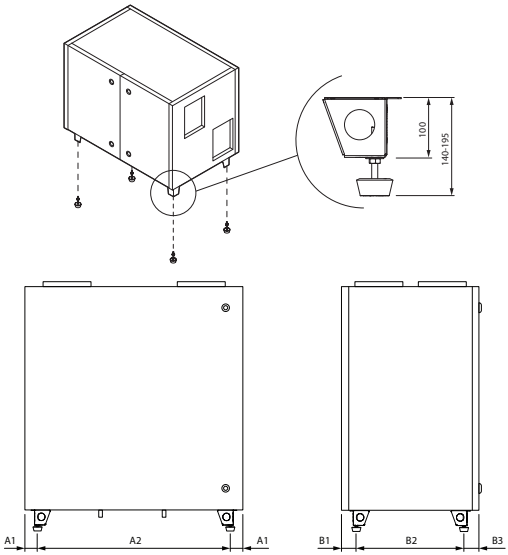

Fig. 9. Air handling units with mounting legs and adjustable feet

Unit	A1 mm	A2 mm	B1 mm	B2 mm	B3 mm
RHP 450 V C5	35	760	81	480	84
RHP 700 V C5	35	930	81	580	84
RHP 900 V C5	56	958	81	623	96
RHP 900 H C5	81	1138	81	623	96
RHP 1200 U C5	81	1343	81	728	96
RHP 1600 U C5	81	1343	81	728	96

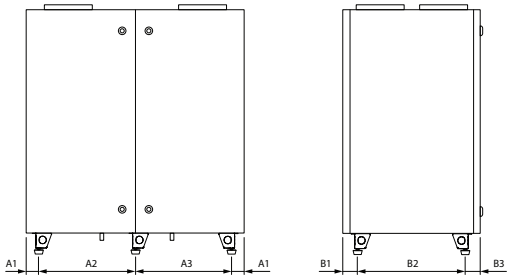

Unit	A1 mm	A2 mm	A3 mm	B1 mm	B2 mm	B3 mm
RHP 2500 V C5	80	670	670	80	765	95

3.2. Inspection Area

Based on its type, an air handling unit may be installed indoors or outdoors. When selecting an installation or mounting location, you must foresee sufficient and security compliant access space for repair and maintenance operations. The unit must be installed in a way to allow partial or full disassembly and removal of assemblies out of the sections, if needed (e.g., in case of complex repairs).

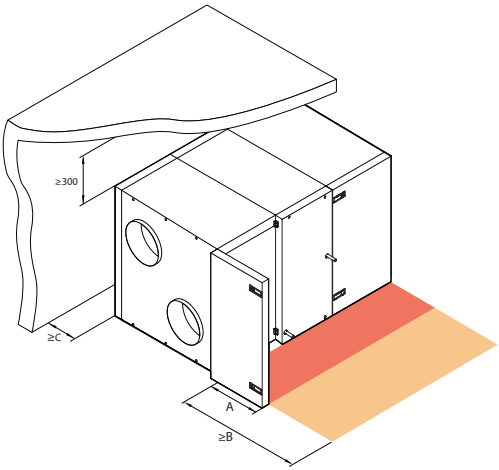

Fig. 10. Device inspection area

Minimum service area A defines an area which must be free of any stand-alone or immovable devices, equipment, partitions, structure or furniture. This area is sufficient for performing service and filter replacement works. For repair and replacement of components (e.g., removal of rotary heat exchangers), access area equal or wider to the distance of the device B shall be ensured in front of the device. Please note that the back wall of units must be removed for any repair works of the heat pump, therefore, the distance between the mounted unit and the wall must be equal to or greater than the distance C. This gap will also help to reduce transfer of noise and vibrations from the unit to walls, prevent moisture and mould due to condensation.

Unit model	A, mm	B, mm	C, mm
RHP			
450 V	850	850	400
700 V	1020	1020	400
900 V	1120	1120	400
900 H	700	850	400
1200 U	550	905	400
1600 U	550	905	400
2500 V	800	990	400

When selecting an installation or mounting location, keep in mind that preventive maintenance works must be performed at least twice a year or more often, therefore, a safe and easy access to the unit must be foreseen.

3.3. Duct system installation

The air in and out of the unit flows through the duct system. The duct system should be designed and selected to have low airflow rates and low pressure differentials, ensuring more accurate airflow rates, lower energy consumption, lower noise levels and longer life of the unit.

Outdoor vents must be installed as far apart as possible on different sides of the building to prevent the exhaust air from returning to the air intakes. Try to install the air intake vents where the outdoor air is the cleanest: do not direct them towards the street, car park or outdoor fireplace. We also recommend installing the air intake vent on the north or east side of the building, where the heat of the sun in summer will not have a significant effect on the supply air temperature.

It is highly recommended to install unit connecting ducts of supply inlet and exhaust outlet with a minimum slope on the outside of the premise, to avoid water flowing into the unit in case of rain or snow.

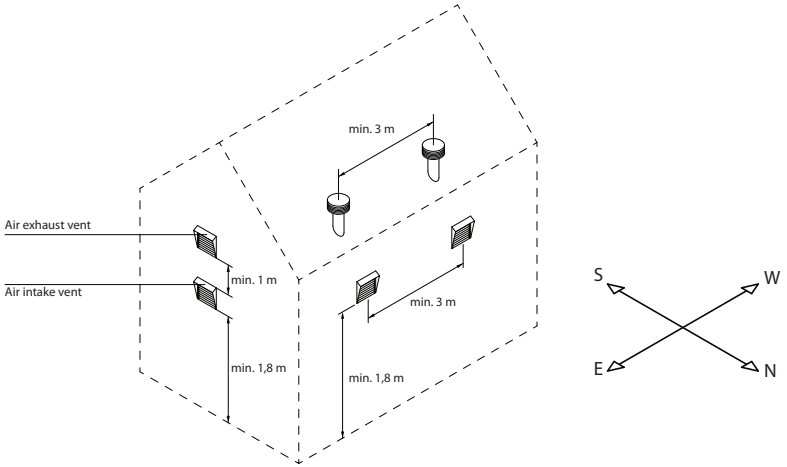

It is recommended to insulate the ducts in unheated rooms (attic, basement) to avoid heat loss. It is also recommended to insulate the supply air ducts if the unit is used for room cooling.

Circular air ducts are fitted to the unit with self tapping screws. Different air flow duct positions are marked on the sticker located on the AHU:

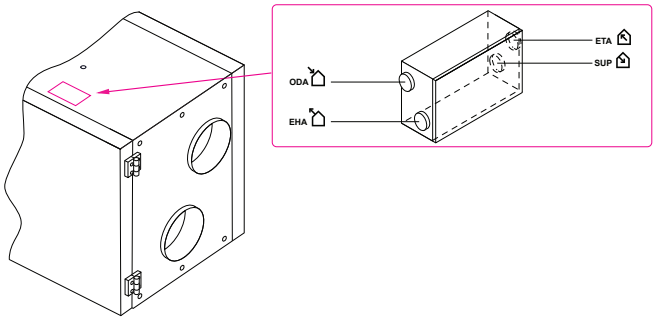

ODA – outdoor air

SUP – supply air

ETA – extract air

EHA – exhaust air

- **Ducts connecting the unit to the exterior of the building must be insulated (insulation thickness 50–100 mm) to prevent condensation on cold surfaces.**
- **Air intake and exhaust ducts must be fitted with air shut-off dampers (electric with actuators) to protect the unit from exposure to climatic conditions when the unit is switched off.**
- **In order to minimise AHU noise transferring through the ducts into ventilated areas, sound attenuators must be connected to the unit.**
- **Duct system elements must have separate brackets and to be mounted in a way that their weight is not shifted to the unit casing.**
- **Do not drill or screw self-tapping screws into the housing in other than specified locations as it may damage internal wires and tubes.**

The diameter of the ducts varies by unit model:

Unit	Duct diameter, mm			
	ODA	SUP	ETA	EHA
RHP				
450 V	160	160	160	160
700 V	250	250	250	250
900 V	250	250	250	250
900 H	250	250	250	250
1200 U	300×300	300×300	300×300	300×300
1600 U	300×300	300×300	300×300	300×300
2500 V	750×200	750×200	750×200	750×200

3.4. Connection of external heating/cooling units[1]

Additionally, you can connect the following to RHP air handling units:

- Water heater.
- Water cooler.
- Direct expansion (DX) cooler/heater.

These accessories are installed in the air supply duct in the premises. All assemblies in the heating or cooling systems must be connected by a qualified specialist.

When connecting the heater/cooler pipes, they must be supported by a box spanner – otherwise they will be damaged. If water is used in the heater, for frost protection water temperature sensor (B5), must be installed and fixed with strap on the return water pipe as close to the heater as possible. Fix the sensor in a way that its metal part has good contact with a surface of the pipe. The sensor must be thermally insulated so that the room temperature does not distort water temperature measurements.

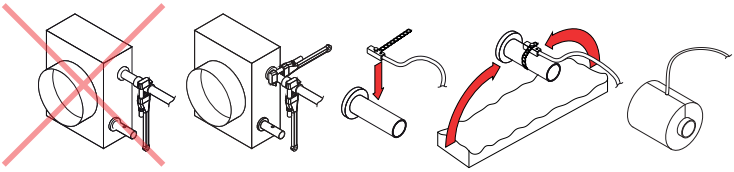

Fig. 11. Connecting the water heater/cooler hoses and installing the water temperature sensor

- **When operating the unit with negative outdoor temperature, a water-glycol mixture must be used as heat medium in a water heater or cooler or it is necessary to ensure a return water temperature of at least 25 °C.**
- **Pipework package[2] must include circulation pump, which circulates heating/cooling medium through the coil (smaller circuit) and 3-way mixing valve with modulated actuator. In cases if 2-way valve is used, additionally it must be installed non-return valves to ensure continuous circulation around smaller circuit. PPU must be installed as close to the water coil as possible.**
- **In order to additionally protect the water heater from freezing, you may also use a capillary ther-mostat (see section "Electrical installation") that should be mounted on the surface of the heater.**

Heat exchanger coil of DX coolers/heaters are factory-filled with nitrogen gas. Before connecting heat exchanger coil to the refrigerant system, the nitrogen gas is discharged through a valve which is then cut off and coil connections are soldered to the pipeline.

[1] Ordered separately.
[2] It is recommended to use PPU made by Komfovent.

3.5. Connection of a Condensate Drain

Operation of the heat pump causes condensation that accumulates in specially designed condensate trays. Condensate is removed from condensate trays via drainage pipes, therefore a condensate drainage system must be connected. Drainage piping must be mounted with a slope, without narrowing sections or loops preventing water from draining. If such drainage piping is installed outdoors or in unheated premises, it must be adequately insulated or equipped with a heating cable to prevent water from freezing during winter. Drainage piping is connected to the unit with a siphon. Due to negative air pressure in the air-handling unit, water may not drain out of the condensate collection tray by itself. Therefore, it is necessary to connect a proper height siphon or a siphon with a one-way valve to the drain pipe.

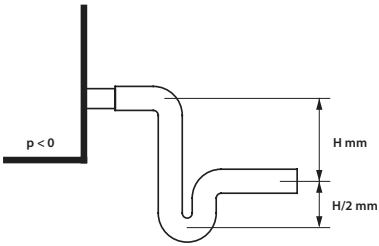

Fig. 12. Installation of a siphon

Height *H* of a siphon without a one-way valve is selected according to static pressure *p* inside the air handling unit:

$$H\ [mm] = 25 + p\ [mm\ H_2O] = 25 + 0.1 \times p\ [Pa]$$

The height of a siphon with a non-return valve may be lower; however, it depends on the technical data of the siphon used; therefore, if possible, we recommend choosing its height in the same way as for a siphon without a non-return valve.

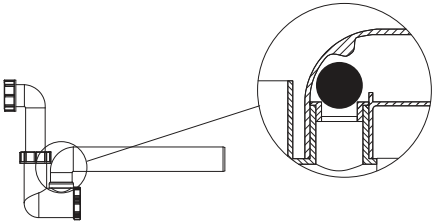

Fig. 13. Example of a siphon with a one-way valve

Any drainage system cannot be directly connected to the common waste water system in order to protect supply air from contamination with bacteria and odours. Condensate from the air handling unit drainage system shall be collected into a separate container or should be lead to a sewage grille without any direct contact: do not connect drain directly to sewer pipe and do not immerse it into water. Condensate collection location must be easily accessible for cleaning and disinfection.

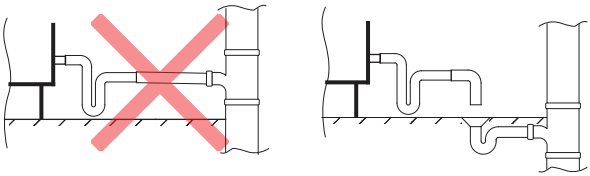

Fig. 14. Condensate drain connection to sewer system

3.6. Outdoor Units

RHP 1200 - 1600 air handling units are suitable for outdoor installation[1]. Units for outdoor installation must be additionally protected against environmental effects by installing a protective roof and exhaust air hoods. Air dampers must be mounted on air duct connections on the air intake and exhaust sides. If the outdoor unit will be switched off during the cold season, supply and extract air ducts (on the indoor side) must be fitted with additional air shut-off dampers. These should prevent warm indoor air from circulating inside the unit when it is stopped to avoid condensation, which may be detrimental to electronic components. If air damper actuators are used which are not intended for outdoor installation, they must be additionally protected against rain and snow with covers or boxes.

Air handling units, when possible, should be installed near the walls for protection against wind loads.

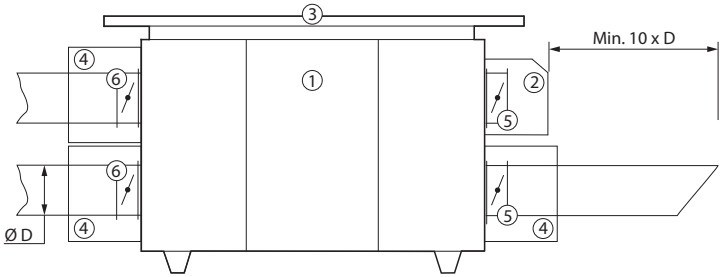

Fig. 15 Accessories for outdoor installed units
1 – air handling unit, 2 – air intake hood, 3 – roof, 4 – boxes or covers for air damper actuators,
5 – air shut-off dampers, 6 – additional air dampers for protection of a stopped unit

- **The outdoor units with water drainage pipes must be additionally protected against freezing, for example, with electric heating cables for drainage pipes.**
- **Connections of outdoor units must be additionally sealed (the sealant is not included).**
- **Air intake and outlet hoods must be installed as far apart as possible (for example by installing additional duct segments between AHU and hood), to prevent the exhaust air from returning to the air intakes.**
- **Air damper actuators of the outdoor mounted AHU must be protected from rain and snow. Actuators must be covered by installing additional protective boxes or hoods.**

4. TECHNICAL INFORMATION

Unit	Operating current	Supply voltage	Electric heater capacity	Power of fans	Weight	Compressor heater capacity	Compressor cooling capacity	Refrigerant	Quantity of refrigerant
	A	V	kW	W	kg	kW	kW	–	kg
RHP									
450 V	10,8	1~230	1	2*116	121	3,6	3	R1234YF	0,7
700 V	14,1	1~230	1,5	2*154	150	5,6	4,7	R1234YF	1,35
900 V	8,7	3~400	2	2*200	195	6	5	R1234YF	1,4
900 H	8,7	3~400	2	2*211	190	6	5	R1234YF	1,4
1200 UH/UV	12,2	3~400	3	2*295	270	10,4	8,1	R454C	1,6
1600 UH/UV	12,2	3~400	3	2*393	270	12,5	10,5	R454C	1,6
2500 V	19,2	3~400	4,5	2*744	340	19,6	17,1	R454C	1,9

[1] The devices can only be installed outdoors by connecting their ducts horizontally.

5. UNIT DIMENSIONS

5.1. Horizontal units

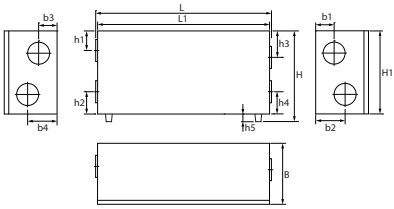

Unit	Inspection side	Dimensions, mm											
		Width, B/B1	Length, L/L1	Height, H/H1	h1	h2	h3	h4	h5	b1	b2	b3	b4
RHP													
900H	Right R1	800	1343/1300	885	225	225	225	225	120	525	225	525	225
	Left L1	800	1343/1300	885	225	225	225	225	120	525	225	525	225
1200 UH	Right R1	905	1605/1505	1026/905	245	245	240	215	100	595	250	240	635
	Left L1	905	1605/1505	1026/905	240	215	245	245	100	240	635	595	250
1600 UH	Right R1	905	1605/1505	1026/905	245	245	240	215	100	595	250	240	635
	Left L1	905	1605/1505	1026/905	240	215	245	245	100	240	635	595	250

5.2. Vertical units

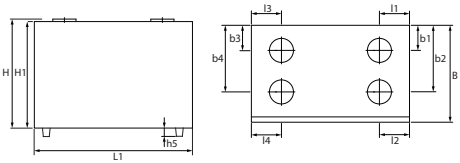

Unit	Inspection side	Dimensions, mm											
		Width, B/B1	Length, L/L1	Height, H/H1	l1	l2	l3	l4	h5	b1	b2	b3	b4
RHP													
450V	Right R1	645	830	947/930	190	140	140	190	100	177	466	177	466
	Left L1	645	830	947/930	140	190	190	140	100	177	466	177	466
700V	Right R1	745	1000	1118/1100	185	185	185	185	100	185	521	185	521
	Left L1	745	1000	1118/1100	185	185	185	185	100	185	521	185	521
900 V	Right R1	800	1070	1202/1180	240	240	240	240	120	221	576	221	576
	Left L1	800	1070	1202/1180	240	240	240	240	120	221	576	221	576
1200 UV	Right R1	905	1505	955/905	240	240	240	240	100	240	650	230	595
	Left L1	905	1505	955/905	240	240	240	240	100	230	595	240	650
1600 UV	Right R1	905	1505	955/905	240	240	240	240	100	240	650	230	595
	Left L1	905	1505	955/905	240	240	240	240	100	230	595	240	650
RHP2500 V	Right R1	940	1500	1450/1400	174	474	174	474	120	451	451	451	451
	Left L1	940	1500	1450/1400	313	474	174	474	120	451	451	451	451

6. ELECTRICAL INSTALLATION

Only qualified professionals may perform electrical installation works in accordance with the manufacturer's instructions and applicable legal acts and safety requirements. Before installation of any electrical components:

- **Make sure the unit is unplugged from the mains.**
- **If the unit has been standing in an unheated room for a long time, make sure there is no condensation inside and check if contacts and electronic parts of the connectors are not damaged by moisture.**
- **Inspect the power cable ant other wiring for damage in insulation.**
- **Locate the wiring diagram for your unit according to the unit type.**

6.1. Requirements for Electrical Connection

- **Connect the unit only to a proper power outlet with a protective earth connection. If the AHU is fitted with a main power switch, connect the electrical supply to it. The power socket or main switch, along with its earthing, must be installed in accordance with the requirements of EN 61557, BS 7671, or IEC 60364.**
- **It is recommended to connect AHU to the mains via automatic circuit breaker with 30 mA current leakage protection (type B or B+).**
- **Control cables should be installed at least 20 cm away from power cables to reduce the possibility of electrical interference.**
- **All external electrical elements must be connected strictly according to the wiring diagram of the unit.**
- **Do not disconnect the connectors by pulling wires or cables.**

Lead-in cable diameter depends on a maximum current specified in the technical data print-out of the specific unit.

Current, A	Cable type
15	5 × 1,5 mm² (Cu)
21	5 × 2,5 mm² (Cu)
27	5 × 4,0 mm² (Cu)
34	5 × 6,0 mm² (Cu)
50	5 × 10,0 mm² (Cu)
70	5 × 16,0 mm² (Cu)
85	5 × 25,0 mm² (Cu)

6.2. Connection of Electrical Components

All internal and external elements of the unit are connected to the main board of the C5 control panel (marked as "RG1" in wiring diagrams), located inside the unit. In some units, you will need to unscrew the metal cover to access the control panel. You can see the exact location of the C5 controller in the unit in section "Unit components".

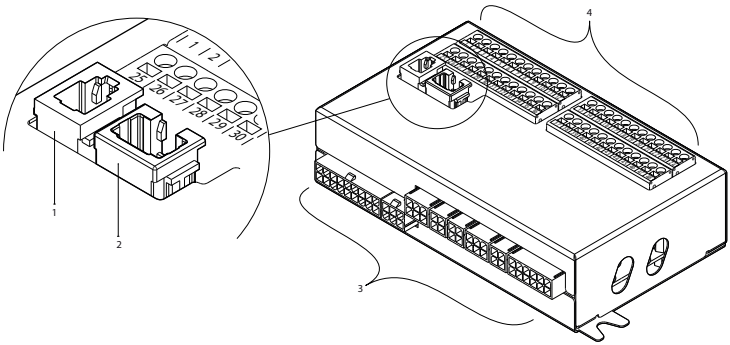

Fig. 16. C5 controller main board
1 – control panel connection, 2 – Intranet or Internet connection, 3 – inner connections of components,
4 – terminals for external components

Terminals for the external elements of the controller board are numbered and are used only to connect external components. These may remain empty if no additional features are required.

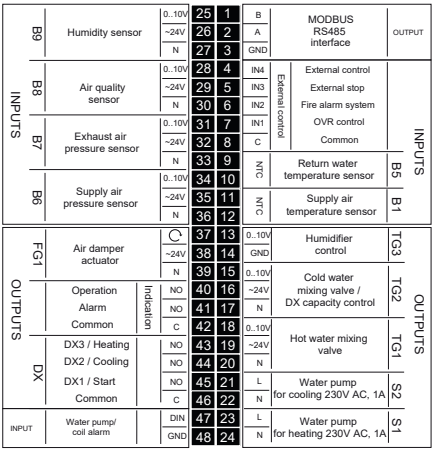

Fig. 17. Connection terminals for external components on the C5 main board

Total power of all external devices with 24 V supply voltage shall not exceed 25 W.

Modbus RS485 (1-3) – data cable connection for controlling the unit from a building management system via Modbus RTU protocol. Also these terminals can be used for additional heating/cooling zone control module connection (see „Additional zone control installation manual“).

External control (4–8) – terminals for controlling specific functions of the unit via external contacts which are connected to a common terminal 8. These include thermostats, switches, motion sensors and other devices with normally open or closed contacts. Activated functions will operate as long as those contacts are connected.

- **Terminal 4 i**s used to switch between heating and cooling modes, if a combined water heater is used (after terminals are connected, the water valve actuator and pump will be controlled according to the cooling signal. For example, a thermostat can be connected here to close terminals when cold water circulates in the system).
- Closing contacts **5** and **8** will stop the unit.
- Fire alarm requires a normally closed contact (NC), therefore, a jumper is connected between **terminals 6 and 8**, instead of which, building fire system can be connected. When the contact is disconnected, the unit stops, fans speed up (according to the order) and a fire alarm message is displayed.
- **Terminal 7** actives an “Override” ventilation mode (OVR). This mode has priority over other AHU functions and may be activated even when the unit is stopped (i.e. to start the unit by closing contacts). OVR function settings are set via the control panel or computer. This function is active as long as terminals are closed.

B5 (9–10) – when a water heater is installed, this terminal is used for connecting a return water temperature sensor (NTC 10kΩ) which protects against freezing.

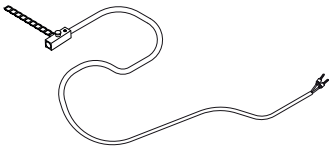

Fig. 18. Return water temperature sensor

B1 (11–12) – terminal for a supply air temperature sensor (NTC 10kΩ) for controlling air temperature.

Fig. 19. Supply air temperature sensor

For the most accurate temperature measurement, sensor in a duct must be installed after all heating/cooling devices at least two duct diameters away from the nearest coil.

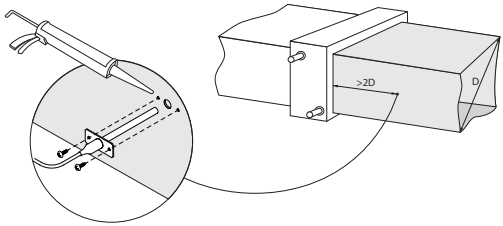

Fig. 20. Installation of a supply air temperature sensor

TG3 (13–14) – for connecting control signal (0..10 V) of an external humidifier or dehumidifier, if activated.

TG2 (15–17) – power supply (24 V AC) and control signal (0..10 V) for a water cooler mixing valve actuator. If a DX unit is installed (controlled by a modulated signal), DX unit control signal is connected to these terminals and water cooling is disabled.

TG1 (18–20) – power supply (24 V AC) and control signal (0..10 V) for a water heater mixing valve actuator. If a combined water heater/cooler is used, valve actuator will be controlled by a heating or cooling signal (whichever is supplied).

S2 (21–22) – 230 V AC supply voltage for a cold water circulation pump, which is used with external water cooler coil and is activated when cooling is needed. Max 1 A.

S1 (23–24) – 230 V AC supply voltage for a hot water circulation pump, which is used with external water heater coil and is activated when heating is needed. Max 1 A.

B8/B9 (25–30) – terminals for air quality and humidity sensors, which are used for the following functions (see "User Manual"):

- Air quality control (AQC).
- Operation on demand (OOD).
- Humidity control (HUM).

These functions may be controlled via the following type sensors (sensor type may be changed only by an authorised service representative):

- Carbon dioxide CO_2 (default setting) – range 0..2000 ppm.
- Air quality VOC (*Volatile organic compound*) – range 0..100 %.
- Relative humidity RH – range 0..100 % RH.
- Temperature TMP – range 0..50 °C.

B6/B7 (31–36) – when a VAV airflow control method is used (see "User Manual"), optional pressure sensors must be installed and connected in the ducts. Follow the manufacturer's instructions for installation of VAV pressure sensors. Also, these terminals are used for DCV airflow control when a separate 0...10 V signal can be used to adjust the ventilation intensity (see "User Manual").

FG1 (37–39) – terminals used to connect air damper actuators. These terminals may also be used for connecting 24 V AC power supply actuators with or without a spring return.

Indication (40–42) – terminals are used when a normally open (NO) contact is necessary for operation status or fault indication.

Cooling control (43–46) – digital normally open (NO) outputs for controlling direct expansion (DX) coolers/heaters. The purpose of outputs differs depending on the type of DX device control ordered or programmed in the control panel[1]:

- Stepping control of start/stop type DX cooling devices – each of the 3 outputs is activated one after the other, when the power of the previous stage is insufficient, with 5 min. delay.
- Stepping control of start/stop type reversible (cooling/heating) DX devices – DX1 and DX2 outputs are activated one after the other, when the power of the previous stage is insufficient, with 5 min. delay. DX3 output is used for switching DX devices between cooling and heating modes.
- If a DX device is controlled by a modulated signal (0..10 V), digital outputs are used for starting a DX unit and changing operation modes thereof: DX1 – start signal, DX2 – cooling, DX3 – heating. Power control signal for this type of the DX unit is connected to TG2 terminals.

Water pump/coil alarm (47–48) – here you can connect signal for indication of water pump faults (if this function is available on the pump); if the pump fails, the air handling unit is stopped. Also these terminals can be used for additional frost protection of water heater coil, by connecting here capillary thermostat, which is mounted on the surface of the coil.

[1] If the DX device was not predefined in the controller software, these outputs will be inactive.

Additional connection terminal block[1] **(L1,N)** – auxiliary devices that require a 230V power supply, for example heating cable for condensate drain or laptop charger can be connected here during AHU repair or maintenance.

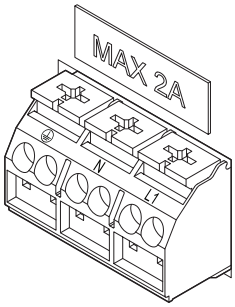

Fig. 21. Additional connection terminal block

All cables from external components must be routed through the rubber grommets. To seal the cable correctly, do not make an "X" cut or too large hole in the grommet.

6.3. Control Panel Installation

The control panel must be installed in a room with:

- Ambient temperature – 0..40 °C;
- Relative humidity – 20..80 %;
- Guaranteed protection against accidental water drops.

Control panel can be mounted in a concealed mounting box or directly on the wall (screws supplied with the panel). You can also use magnets (on the back surface) to attach the panel to metal surfaces (i.e. on the door of the unit).

Do not use any other type or size screws but those that are supplied for control panel mounting. Wrong screws may cause damage to a circuit board.

Control panel is supplied with a 10 m cable. If this cable is too short, you can replace it with a 4 × 0.22 mm cable, up to 150 m long.

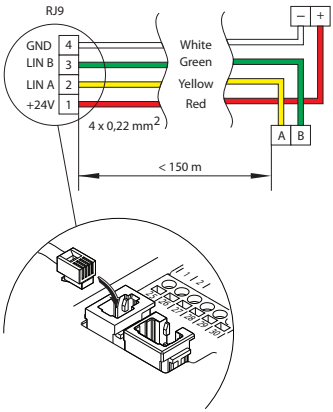

Fig. 22. Control panel wiring diagram

[1] Except RHP 450V and RHP 700V.

Control panel cable shall be installed further away from other power supply cables or high voltage electrical equipment (electrical enclosure, electrical water heating boiler, air conditioning unit, etc.). The cable can be pulled through openings in the back or bottom part of the control panel (follow the installation instructions provided with the control panel). Wire to the board of the C5 control panel must be connected to a dedicated slot or terminal of external components (see Fig. 22).

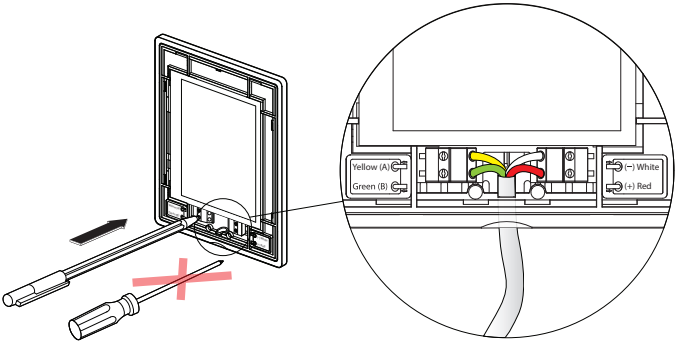

Fig. 23. Control panel cable wiring

- **Do not use sharp tools for pinning contacts in the control panel (e.g., screwdriver). Please use a pencil or a ballpoint pen.**
- **Do not use any ferrules (or lugs) on the wires to be connected to the control panel, as they may prevent the cable from connecting properly or may damage the panel's connectors.**
- **To the controller main board connect only the completely assembled control panel with back and front covers installed. If installing covers when the control panel is powered up you may damage the internal electronic components.**

6.4. Connecting the Unit to the Local Computer Network or the Internet

Your AHU may be controlled not only with a control panel, but also with a computer or smart phone. For this reason the unit must be connected to the internal computer network or the Internet. In case of a computer, the unit is controlled via a web browser, and in case of a smart phone - via the Komfovent app. Use CAT5 type cable to connect your AHU to the computer network (RJ45 connection; see Fig. 16). The total cable length between the unit and the network router must not exceed 100 metres. By default, the IP address of your air handling unit is ***192.168.0.50***, however it can be changed (if necessary) according to the local network parameters. IP address can be found and changed in the control panel.

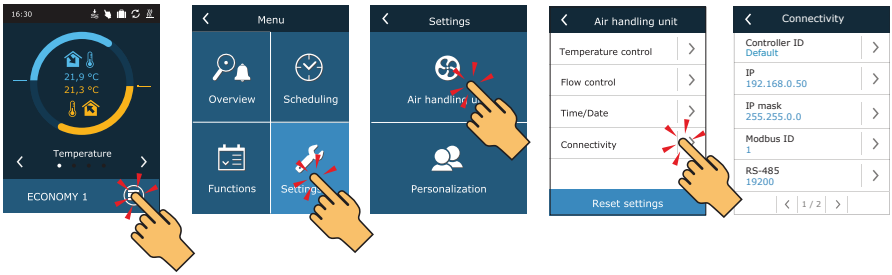

Fig. 24. Viewing and changing the IP address with a control panel

UAB KOMFOVENT we reserve the right to make changes without prior notice

An air handling unit connected to a network router can be controlled by a computer via wireless connection (Wi-Fi). The unit may also be controlled wirelessly in a local network using a smart phone with the Komfovent app. Once the unit is connected to the network router, you should assign a free IP address on the local network.

When connecting your computer directly to the unit, open the network settings and manually assign an IP address, the last number of which would be different from the unit's IP address (for example, if the unit's IP address is 192.168.0.50, assign the address 192.168.0.70 to the computer). Enter the subnet mask: 255.255.0.0.

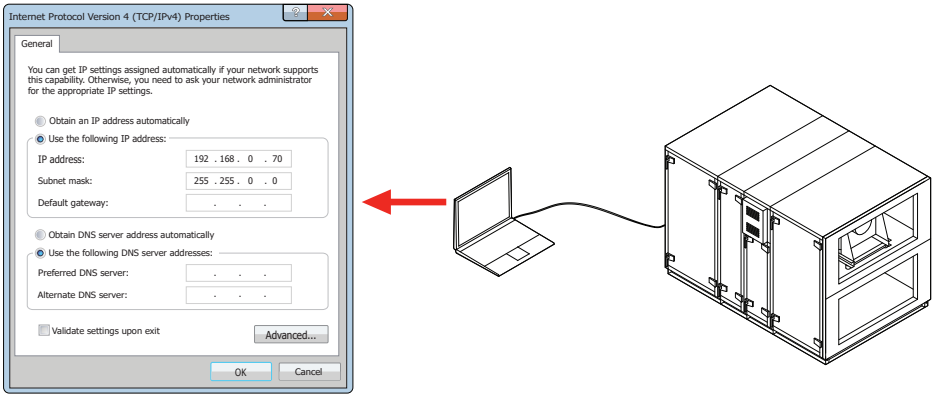

Fig. 25. Computer network settings for direct connection to the unit

In order to control your AHU over the Internet, connect it to the network router which has access to the Internet. Follow the router manual to configure port forwarding to the unit IP address. Depending on whether you will use your computer or smart phone with the Komfovent app to control your AHU, you will also need to enter a corresponding port number to the router. For control via your computer use the port ***80***, and for control via your smart phone use the port ***502***. Once a computer or smart phone is connected to the Internet, enter an external router IP address and set port number to your web browser or the Komfovent app to access the AHU user interface (for more information on control with a computer or smart phone see "User Manual").

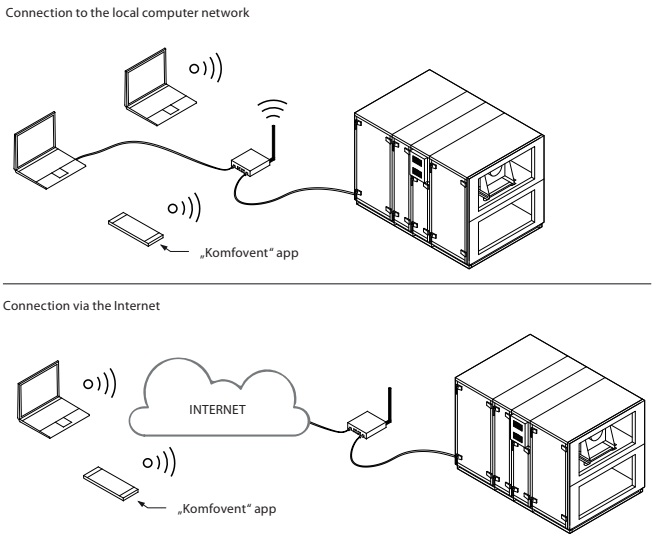

Fig. 26. Examples for the AHU connection to the Internet or the local network

7. FILTERS

Air filters are intended for removing dust, bacteria and other fine particles from the supplied and extracted air. RHP Standard air handling units use compact filters. Filters are made of synthetic fabric and can have different filtration classes[1], i.e., intended for removing particles of different sizes. In general, supply air flow is equipped with better filtering class filters than extracted air since the cleaned outdoor air is supplied to the premises.

The contamination of the filters is monitored by pressure switches installed inside the unit and set to a certain differential pressure, based on the type of filter used. If filters of other manufacturer or different filtration class is used, the range of the pressure switches must be set correctly after their replacement. The pressure switches are set by removing the top cover and turning the knob to the necessary limit of differential pressure. After the filter becomes dirty and the differential pressure value is reached, a message will be displayed on the control panel or computer screen.

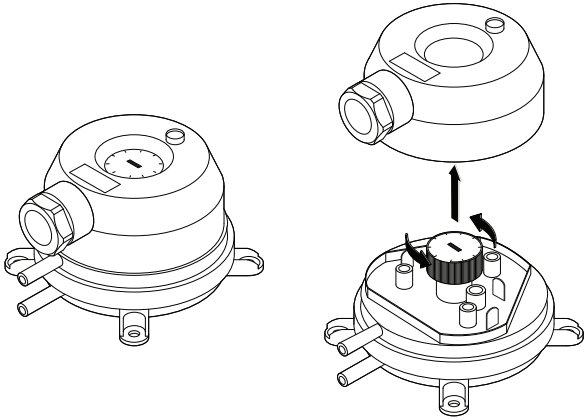

Fig. 27. Pressure switch

Filters

Unit	Filter type	Supply		Exhaust	
		Class	B×H×L, mm	Class	B×H×L, mm
RHP					
450V	Compact	ePM1 60% (F7)	540×185×46	ePM10 50% (M5)[2]	540×185×46
700V	Compact	ePM1 60% (F7)	640×260×46	ePM10 50% (M5)[2]	640×260×46
900 V	Compact	ePM1 60% (F7)	695×330×46	ePM10 50% (M5)[2]	695x330x46
900 H	Compact	ePM1 60% (F7)	705×390×46	ePM10 50% (M5)[2]	705×390×46
1200 U	Compact	ePM1 60% (F7)	805×400×46	ePM10 50% (M5)[2]	805×400×46
1600 U	Compact	ePM1 60% (F7)	805×400×46	ePM10 50% (M5)[2]	805×400×46
2500 V	Compact	ePM1 60% (F7)	840×420×92	ePM10 50% (M5)[2]	840×420×92

[1] Depends on the order.

8. COMMISSIONING AND INSPECTION OF THE UNIT

Before switching on the device, check for foreign objects, debris or tools inside the unit. Make sure that air filters are installed and condensate drainage is connected (if necessary), fill the siphon with water. Make sure that the ductwork is free from obstructions such as fully closed diffusers or adjustment valves or blocked external air intake grilles. Inspect the heat pump assembly. Check for presence of moisture in the refrigerant system. A sight glass with moisture indicator is provided for this purpose. The indicator is completely green when there is no moisture in the system and changes colour (to yellow or red) when moisture is detected. Check the approximate level of the refrigerant - liquid level should be at least up to ¾ of the sight glass.

- **The operation, maintenance or repair of the air handling unit is prohibited for people (including children) with mental, physical or sensory disabilities, as well as for persons without sufficient experience and knowledge, unless supervised and instructed by the person responsible for their safety in accordance with these instructions.**
- **You may start your AHU only when it is fully installed, ducts and external electrical elements are connected. Do not start the unit without air ducts connected. This may distort air volume measurements required for stable operation of the fans.**
- **Do not use the unit with a temporary electrical power supply as unstable power can damage the electronic components.**

See the KOMFOVENT website for user manuals.

The unit is controlled via a control panel or a computer. The unit is supplied with the following operation modes that may be used immediately after installation or different ventilation settings may be selected.

- **COMFORT 1** – maximum ventilation intensity (100%), desired air temperature – 21°C.
- **COMFORT 2** – average ventilation intensity (50%), desired air temperature – 21°C.
- **ECONOMY 1** – low ventilation intensity (33%), desired air temperature – 20 °C.
- **ECONOMY 2** – minimum ventilation intensity (20%), desired air temperature – 19°C.
- **SPECIAL** – maximum ventilation intensity (100%), desired air temperature – 21°C.
  This mode may also be used to disable heating/cooling and other functions.

8.1. Control panel C5.1[1]

C5.1 is control panel with coloured touch-screen for remote control of your air handling unit. This control panel is designed for indication and changing of various functions and settings of the unit.

Fig. 28. Control panel

If the unit is connected to the mains, the control panel will display a home screen or a screen saver that you can switch off with a single tap.

[1] Sold separately.

To start an air handling unit or change a ventilation mode:

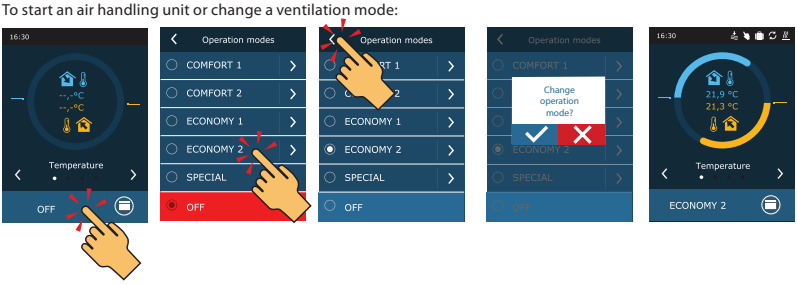

During the first minute of starting the unit, the unit automation checks the settings, automation components and opens air dampers. Later, a signal is sent to fans and a heat exchanger, and the unit starts operating at a selected ventilation mode.

The first time you turn on your air handling unit, you will have to perform calibration of a HP evaporator[1] (if not performed during installation). This calibration is necessary for proper operation of the antifreeze prevention function.

During calibration, the unit will run for 10 minutes by changing fan speed and will be measuring pressure inside the unit, therefore, do not open the unit door, do not adjust the duct system or change parameters at that time. To stop calibration, turn off the unit with a control panel or in the Overview screen.

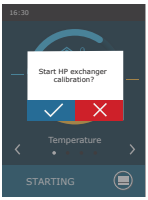

To change the ventilation mode settings: select a desired mode and set a desired air volume or temperature with the arrows.

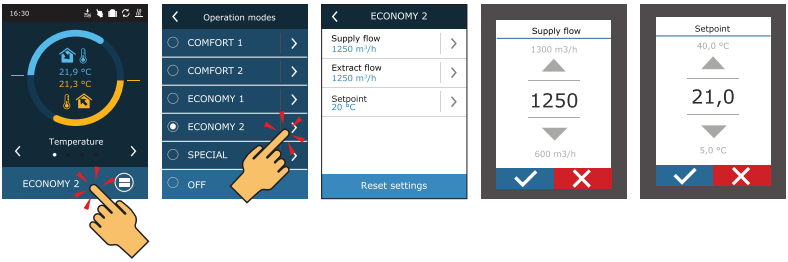

To turn of the AHU and return to a home screen:

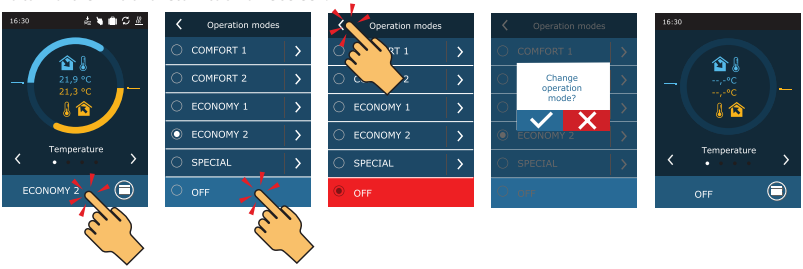

[1] Only for AHU with electronic TRV controller board.

UAB KOMFOVENT we reserve the right to make changes without prior notice

8.2. Starting the Unit With a Computer

If the unit was ordered without a control panel or it is not used, you can start it with your computer. In this case the unit is controlled via a web browser. Connect your computer directly to the AHU or to the same computer network as described in Chapter 6.4. Run the Internet browser on the computer and disable the use of all Proxy servers that may block the connection in the settings. In the web browser address bar, enter the IP address of the unit:

Login to the C5 control panel interface in a window that opens: enter the user name ***user***, password ***user***[1] and press CONNECT.

If you login attempt is successful, "Overview" window is opened.

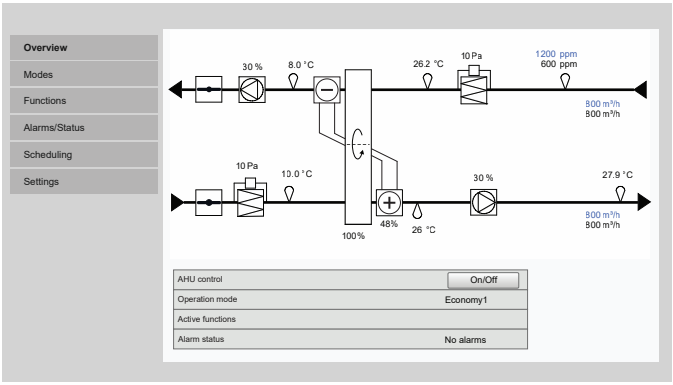

[1] If the password was changed, use the changed password.

To start the unit and change the ventilation mode settings:
1. Press button “Modes”.
2. Select a desired ventilation mode from the list.
3. Enter desired air flow and temperature in the selected mode settings.
4. Press “Save” button at the bottom of the screen.

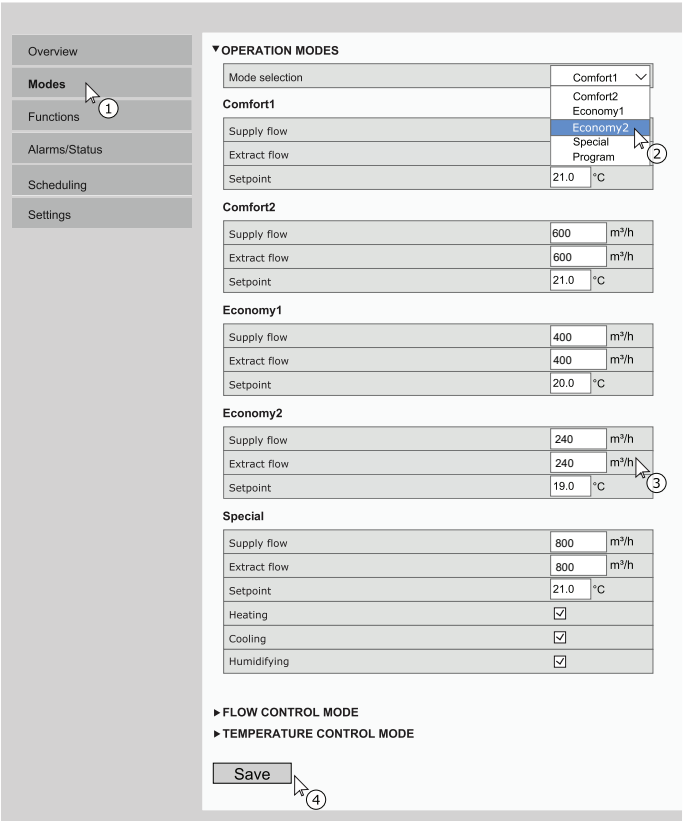

You can stop the unit by pressing ON/OFF button in the “Overview” window.

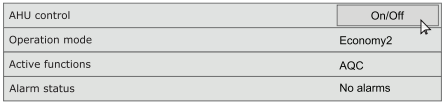

8.3. Quick Inspection

The first time you start your device, make sure that:

Task	Yes	No	Comments
Control panel is working, responds to touch, no error messages			
All air filters are installed			
Air dampers fully open			
There are no unusual noise or vibrations			
Changing the ventilation modes changes the fan speed			
The unit is airtight without gaps or air leakage			
Heating/cooling devices are working			
Connected external devices are working			
The condensate easily flows from the unit and the drainage piping is watertight			
Check for leaks in the heat pump piping system			
Check if there is no moisture in the refrigerant system			
The heat pump compressor operates properly, without any extraneous noise and vibrations.			
HP heat exchanger calibration performed (only in HP units)			
Other comments:			

Installer	
Company	
Tel. No.	
Date	
Signature	

APENDIX NO.1

WARRANTY INFORMATION

Dear Customer,

KOMFOVENT thanks you for your choice. We are pleased that you have chosen us and will strive to ensure you are satisfied with your purchased product. To avoid misunderstandings, we kindly ask you to read the installation and operating instructions of the product carefully.

KOMFOVENT hereby confirms the obligations set by applicable consumer rights protection laws to fulfil consumer claims in case of detected product defects.

In case of any problems, we recommend immediately contacting the company that installed your ventilation unit, the company providing technical maintenance, or the nearest KOMFOVENT distributor branch. Please always note the device serial number. The device's serial number can be found on a sticker attached to the outside of the unit or on a plate mounted on the unit frame. Your claim will be registered and, if repair of the device is required, a representative will agree with you on a convenient arrival time. All repairs covered by the warranty will be carried out free of charge – with no charges for spare parts or labour.

Only an authorized representative can decide whether defective parts should be repaired or replaced with new ones. Replaced or repaired parts remain covered by the overall unit warranty. If repairs are performed after the end of the device's warranty period, the replaced or repaired parts are covered by a 6-month warranty.

The warranty covers all defects in the device arising from manufacturing or assembly faults. When operating the device under the conditions listed below, this warranty is valid from the product purchase date. If the purchase date is unknown, the warranty is calculated from the manufacturing date.

NORMAL OPERATING CONDITIONS

1. The devices must be protected from direct water ingress (rain or snow) and the effects of chemicals or be of special configuration intended for outdoor and/or aggressive environments.

2. The ambient temperature must be from -30 °C to +40 °C (if the unit wall thickness is at least 45 mm) or from 0 °C to +30 °C (if the unit wall thickness is at least 20 mm); exhaust air temperature – from +10 °C to +40 °C; relative air humidity – from 20% to 80%, non-condensing. The ratio of temperature and humidity must not exceed condensation conditions, i.e., condensation must not form on the inner or outer walls of the unit.

3. When starting equipment in new buildings or renovated premises during the autumn-winter season, the exhaust air humidity often exceeds normal operating conditions, and due to dust from construction materials, air filters may become clogged immediately after startup. It is recommended to dry and ventilate the premises before starting the ventilation equipment.

4. The ventilation unit must be periodically inspected (recommended interval – every 4 months): filters and heat exchangers checked for contamination, moving parts and belts checked. Air filters must be replaced at least once per year (recommended twice per year – before and after the heating season).

5. In the case of an extended warranty, periodic inspection of the unit must be performed at least twice a year throughout the entire warranty period, and the results must be recorded. Periodic inspections may only be performed by qualified specialists or a KOMFOVENT representative.

6. It is advisable not to switch off the ventilation unit; when ventilation is not required, reduce the intensity to the minimum.

7. System balancing must be performed before operating the ventilation unit.

KOMFOVENT representative reserves the right to refuse free warranty maintenance services if the following conditions are not met.

WARRANTY CONDITIONS

1. The warranty does not apply in the following cases:
   1.1. If the product usage or operating conditions, as specified in the installation and operating instructions, are violated;
   1.2. If the storage conditions of the unit are violated;
   1.3. If there are signs indicating attempts of unqualified repair;
   1.4. If the unit's construction has been altered;
   1.5. If the unit is used for purposes other than its direct intended use;
   1.6. If the device serial number on the attached plate or sticker has been changed, removed, or is impossible to identify;
   1.7. If the unit is installed not according to the manufacturer's installation instructions, has no space left for maintenance, or is installed in a location difficult to access;
   1.8. For noise, vibration, or colour changes arising from normal wear of the unit or its components.

2. The warranty does not apply to device malfunctions that occur due to:
   2.1. Damage to the unit caused by improper transportation or installation errors;
   2.2. Mechanical damage;
   2.3. Damage caused by foreign objects, materials, liquids, or condensation entering the device, except when this occurs due to a design flaw;
   2.4. Damage resulting from natural disasters, fire, domestic factors, accidental external effects (voltage fluctuations in the electrical network, lightning, etc.), or accidents.

3. Warranty service is not provided in cases where it is necessary to replace operating parts (filters, fuses).

4. Preparatory work required to access the unit and perform quality repairs, such as removal of furniture, walls, partitions, ceilings, ducts, plumbing, equipment from other manufacturers, or other obstructing items, is not considered warranty service. KOMFOVENT representatives have the right to refuse to perform such work.

5. The warranty does not cover additional fluids used in ventilation systems, such as heat exchanger filling fluids, in the event of leakage.

6. The warranty does not cover additional losses attributable to device failure, such as inconvenience, transportation expenses, phone calls and accommodation, personal or business losses, loss of salary or income.

7. KOMFOVENT is not responsible for direct or indirect damage caused by KOMFOVENT products to people, pets, or property if the cause of such damage is failure to comply with the unit's usage and installation rules and conditions, intentional or negligent actions of users or third parties.

Since great attention is paid to product quality, we welcome your feedback, comments, or suggestions regarding the technical and operational properties of the equipment.

SERVICE AND SUPPORT

LITHUANIA
UAB KOMFOVENT
Phone: +370 5 200 8000
service@komfovent.com
www.komfovent.com

FINLAND
Komfovent Oy
Muuntotie 1 C1
FI-01 510 Vantaa, Finland
Phone: +358 20 730 6190
toimisto@komfovent.com
www.komfovent.com

GERMANY
Komfovent GmbH
Konrad-Zuse-Str. 2,
42551 Velbert, Deutschland
Phone: +49 0 2051 6051180
info@komfovent.de
www.komfovent.de

LATVIA
SIA Komfovent
Bukaišu iela 1, LV-1004 Riga, Latvia
Phone: +371 24 66 4433
info.lv@komfovent.com
www.komfovent.com

SWEDEN
Komfovent AB
Ögärdesvägen 12A
433 30 Partille, Sverige
Phone: +46 31 487 752
info_se@komfovent.com
www.komfovent.se

UNITED KINGDOM
Komfovent Ltd
Unit C1 The Waterfront
Newburn Riverside, Newcastle upon
Tyne NE15 8NZ, UK
Phone: 0191 429 4503
info_uk@komfovent.com
www.komfovent.com

PARTNERS

AT	J. PICHLER Gesellschaft m. b. H.	www.pichlerluft.at
BE	Ventilair group	www.ventilairgroup.com
	ACB Airconditioning	www.acbairco.be
CZ	REKUVENT s.r.o.	www.rekuvent.cz
CH	WESCO AG	www.wesco.ch
	SUDCLIMATAIR SA	www.sudclimatair.ch
	CLIMAIR GmbH	www.climair.ch
DK	Øland A/S	www.oeland.dk
EE	BVT Partners	www.bvtpartners.ee
FR	ATIB	www.atib.fr
HR	Microclima	www.microclima.hr
HU	AIRVENT Légtechnikai Zrt.	www.airvent.hu
	Gevent Magyarország Kft.	www.gevent.hu
	Merkapt	www.merkapt.hu
IE	Lindab	www.lindab.ie
IR	Fantech Ventilation Ltd	www.fantech.ie
IS	Blikk & Tækniþjónustan ehf	www.bogt.is
	Hitataekni ehf	www.hitataekni.is
IT	ICARIA	www.icaria.srl
NL	Vent-Axia B.V	www.vent-axia.nl
	DECIPOL-Vortvent	www.vortvent.nl
	ForClima BV	www.forclima.nl
NO	Ventilution AS	www.ventilution.no
	Ventistål AS	www.ventistal.no
	Thermo Control AS	www.thermocontrol.no
PL	Ventia Sp. z o.o.	www.ventia.pl
SE	Nordisk Ventilator AB	www.nordiskventilator.se
SI	Agregat d.o.o	www.agregat.si
SK	TZB produkt, s.r.o.	www.tzbprodukt.sk
UA	TD VECON LLC	www.vecon.ua