komfovent

DOMEKT
C6M AUTOMATION

USER MANUAL

en

LT – Prieš montuodami vėdinimo įrenginį atsisiųskite „Montavimo instrukciją“ / **EN** – Before installing air handling unit download „Installation manual“ / **CZ** – Před instalací vzduchotechnické jednotky si stáhněte „Instalační příručku“/ **DA** – Før installation af luftbehandlingsenheden, download ‚Installationsmanual‘ / **DE** – Laden Sie vor der Installation der Lüftungsanlage das „Installationshandbuch“ herunter / **ET** – Enne õhu käitlemise seadme paigaldamist laadige alla „Paigaldusjuhend“ / **FI** – Ennen ilmanvaihtoyksikön asentamista lataa ‚Asennusopas‘ / **FR** – Avant d'installer l'unité de traitement de l'air, téléchargez le « Manuel d'installation » / **IT** – Prima di installare l'unità di trattamento aria, scaricare il ‚Manuale di installazione‘ / **LV** – Pirms gaisa apstrādes iekārtas uzstādīšanas lejupielādējiet „Uzstādīšanas rokasgrāmatu“ / **NL** – Download voor het installeren van de luchtbehandelingsunit het „Installatiehandleiding“ / **NO** – Før installasjonen av ventilasjonsenheten, last ned „Installasjonsmanual“ / **PL** – Przed zainstalowaniem jednostki wentylacyjnej pobierz „Instrukcję instalacji“ / **SE** – Innan du installerar luftbehandlingsenheten, ladda ner ‚Installationsmanualen‘ / **SK** – Pred inštaláciou vzduchotechnickej jednotky si stiahnite „Inštalačný manuál“ / **UA** – Перед установкою блоку обробки повітря завантажте «Інструкцію з установки»

LT – Prieš įjungdami vėdinimo įrenginį atsisiųskite „Vartotojo instrukciją“ / **EN** – Before turning on an air handling unit, download „User manual“ / **CZ** – Před zapnutím vzduchotechnické jednotky si stáhněte „Uživatelskou příručku“ / **DA** – Før du tænder luftbehandlingsenheden, download ‚Brugermanual‘ / **DE** – Laden Sie das „Benutzerhandbuch“ herunter, bevor Sie die Lüftungsanlage einschalten / **ET** – Enne õhu käitlemise seadme sisselülitamist laadige alla „Kasutusjuhend“ / **FI** – Ennen ilmanvaihtoyksikön käynnistämistä lataa ‚Käyttöopas‘ / **FR** – Avant de mettre en marche une unité de traitement de l'air, téléchargez le « Manuel d'utilisation » / **IT** – Prima di accendere l'unità di trattamento aria, scaricare il ‚Manuale dell'utente‘ / **LV** – Pirms gaisa apstrādes iekārtas ieslēgšanas lejupielādējiet „Lietotāja rokasgrāmatu“ / **NL** – Download voordat u de luchtbehandelingsunit inschakelt het „Gebruikershandboek“ / **NO** – Før du slår på ventilasjonsenheten, last ned „Brukermanual“ / **PL** – Przed włączeniem jednostki wentylacyjnej pobierz „Instrukcję obsługi“ / **SE** – Innan du slår på luftbehandlingsenheten, ladda ner ‚Användarmanualen‘ / **SK** – Pred zapnutím vzduchotechnickej jednotky si stiahnite „Používateľský manuál / **UA** – Перед увімкненням блоку обробки повітря завантажте «Посібник користувача»

UAB KOMFOVENT we reserve the right to make changes without prior notice

CONTENT

1. INTRODUCTION 4
2. AIR HANDLING UNIT FUNCTIONS 4
2.1. Air flow control 4
2.2. Temperature control 5
2.2.1. Thermostat function 5
2.3. Standard operating modes 5
2.4. Special operating modes 5
2.5. ECO mode 6
2.6. AUTO mode 6
2.6.1. Weekly operation schedule 6
2.6.2. Air quality control function 6
2.7. Protective functions 7
3. CONTROL AND SETTINGS 8
3.1. Control panel C6.1 9
3.1.1. Parameter overview 10
3.1.2. Turning on 10
3.1.3. Turning off 11
3.1.4. Thermostat function window 11
3.1.5. Mode change 11
3.1.6. Airflow and temperature settings 13
3.1.7. Air quality control mode activation and settings 13
3.1.8. ECO mode activation and settings 14
3.1.9. Creating a weekly operation schedule 14
3.1.10. Main settings 15
3.1.11. Advanced settings 17
3.1.12. Alarms 22
3.1.13. About device 22
3.2. Control panel C6.2 23
3.2.1. Turning on/off and changing operation modes 23
3.2.2. Messages 23
3.2.3. Control panel sounds 23
3.2.4. Keypad lock 23
3.3. Control via smartphone 24
3.3.1. Connecting to the unit using the "Komfovent Control" app 24
3.3.2. Main functions of the "Komfovent Control" app 26
3.4. Internet control 27
3.5. Control via a computer without an internet connection 29
3.5.1. Turning on/off and changing operation modes 30
3.5.2. Parameter overview 30
3.5.3. Airflow and temperature settings 31
3.5.4. ECO and AUTO mode settings 31
3.5.5. Ventilation by a weekly schedule 32
3.5.6. Creating a weekly schedule 32
3.5.7. Alarms 33
3.5.8. Settings 33
4. TROUBLESHOOTING 36
4.1. Table of messages 36
4.2. Table of light indicators of the C6.2 control panel 38
4.3. Remote control 39
5. PERIODICAL MAINTENANCE 40
5.1. Filter inspection and replacement 40
5.2. Device maintenance journal 48
APENDIX NO.1. KOMFOVENT CONTROL TERMS OF USE AND PRIVACY NOTICE 49
APENDIX NO.2. WARRANTY INFORMATION 52
APENDIX NO.3. WHERE TO FIND SERIAL NUMBER? 54

1. INTRODUCTION

The air handling unit is designed to ensure good ventilation of premises. Air handling unit removes indoor air containing carbon dioxide, various allergens or dust, while replacing it with filtered fresh air from outside. As the outside air is usually colder or warmer than the air within the premises, an integrated recuperator collects thermal energy from the indoor air and transfers the majority of it to the supply air.

When a recuperator is not capable of reaching a desired temperature, heaters or coolers may be additionally activated.[1]

The operation, maintenance or repair of the air handling unit is prohibited for people (including children) with mental, physical or sensory disabilities, as well as for persons without sufficient experience and knowledge, unless supervised and instructed by the person responsible for their safety in accordance with these instructions.

Heat exchangers and heaters (or coolers) are designed to compensate for heat/cool losses during ventilation, therefore, we do not recommend using the unit as the main heating/cooling source. The unit may not reach a user-defined supply air temperature when the actual room temperature differs significantly from the desired room temperature. This will lead to inefficient operation of a heat exchanger.

Make sure that the unit is installed in a designated location, all ducts and wires are connected before turning it on. Check for foreign objects, debris or tools inside the unit. Make sure that air filters are installed and condensate drainage is connected (if necessary). If in doubt, contact your installer or "Komfovent" representative to make sure that the unit is operational.

We recommend that you always keep your device turned on; when no ventilation is required, you shall operate the unit in a minimum mode (20%). This will ensure good indoor climatic conditions and will reduce humidity condensation inside the unit, that may damage electronic components.

Make sure that children will not reach and will not play with air handling unit without adult supervision.

This symbol indicates that this product is not to be disposed of with your household waste, according to the WEEE Directive (2002/96/EC) and your national law. This product should be handed over to a designated collection point, or to an authorised collection site for recycling waste electrical and electronic equipment (EEE). Improper handling of this type of waste could have a possible negative impact on the environment and human health due to potentially hazardous substances that are generally associated with EEE. At the same time, your cooperation in the correct disposal of this product will contribute to the effective usage of natural resources. For more information about where you can drop off your waste equipment for recycling, please contact your local city office, waste authority, approved WEEE scheme or your household waste disposal service.

2. AIR HANDLING UNIT FUNCTIONS

To create a comfortable home environment, you can adjust ventilation intensity and air temperature as well as to create a weekly ventilation schedule. Various additional functions facilitate control of all ventilation processes and reduce electricity consumption.

2.1. Air flow control

Fan speed of air handling units is adjusted by the selected air flow control method:

- **CAV** – constant air volume control. Fan speed is adjusted by measuring air flow and comparing it against the set value. Fan rotates exactly at a speed required to reach the set air volume, regardless of pressure changes. For example, when air filters get contaminated, the fan speed will be automatically increased to reach the same volume of air as during operation with clean filters. In operating modes, the user sets a desired air volume for each fan separately. Air volume is set and measured in m^3/h or l/s.
- **VAV** – variable air volume control mode. This mode allows maintaining constant air pressure in ducts while the fan speed is adjusting according to pressure changes in the ventilation system. Air pressure in ducts is measured with optional VAV pressure sensors installed in supply and exhaust air ducts and connected to B6 and B7 terminals of the main controller (see "Installation Manual"). User sets a desired air pressure value for supply and extracted air individually in operating modes. Air pressure is set and measured in Pa.
- **DCV** – direct air volume control mode. This mode is quite similar to the CAV mode, but additionally allows adjustment of fan speed by connecting a 0..10 V control signal to terminals B6 and B7 of the main board (see "Installation Manual"). As the control signal voltage changes, fan speed is adjusted accordingly, i.e. 10V corresponds to the set air volume value, whereas, 2V corresponds to 20% of the fan power.

Selection of air flow control is described in chapter "Control and Settings".

[1] Depends on the equipment supplied.

2.2. Temperature control

Temperature in the air handling unit is maintained by measuring the actual temperature and comparing it to the user-defined temperature. Then, depending on whether the supply air requires heating or cooling, heat exchanger or additional heaters/coolers are activated. Available temperature control methods:

- **Supply** air temperature control – the unit supplies air of user-defined temperature.
- **Extract** air temperature control – the unit automatically selects the supply air temperature to ensure that the extract air temperature is reached and maintained as quickly as possible. Room air temperature is measured by an integrated extract air temperature sensor.
- **Room** temperature control – the unit automatically selects the temperature of supply air to ensure that the room temperature is reached and maintained as measured by the sensor integrated in a control panel. Control panel must be installed in a room where temperature maintenance is required.
- **Balance** – Supplied air temperature will be maintained to be the same as extracted air temperature, therefore, selecting a desired temperature is not possible. Extract air temperature is measured by an integrated extract air temperature sensor.

  Selection of temperature control is described in chapter "Control and Settings".

To display supply temperature in the control panel, it is needed to install temperature sensor[1] in the supply air duct (see "Domekt installation manual").

2.2.1. Thermostat function[1]

C6.1 control panel can also be used as a room thermostat to turn on/off external heating or cooling devices according to the temperature of the room where the control panel is installed. For example, a heating boiler or heat pump connected to the AHU controller (see "Installation Manual") will be switched on as soon as the temperature of the control panel installed in the room drops below the set value. Thus, you will not need to install a separate thermostat that activates these devices in the room. Thermostat function can also be active when the device is stopped.

When two control panels are used for one AHU, both of them can operate as a separate thermostat to switch on/off different devices. For this purpose, you will have to specify which controller terminals are activated by each of the control panels.

For information on how to activate "Thermostat function" and settings thereof, see chapter "Control and Settings".

2.3. Standard operating modes

4 standard operating modes are available on your air handling unit. Each operating mode has preset air volume and desired temperature values:

	AWAY	NORMAL	INTENSIVE	BOOST
Ventilation intensity	20%	50%	70%	100%
Set temperature	20°C	20°C	20°C	20°C

These settings may be changed (see "Control and Settings").

2.4. Special operating modes

4 special operating modes are available on your air handling unit. During activation, KITCHEN, FIREPLACE and OVERRIDE modes are set for operation from 1 min. to 300 min. In HOLIDAY mode, operation time is set from 1 to 90 days or for a specific date. KITCHEN, FIREPLACE and OVERRIDE modes may also be activated by short-cutting designated terminals on the main board, i.e. by connecting a switch, cooker hood or a motion sensor (see "Installation Manual"). Each operating mode has preset air volume and desired temperature values:

	KITCHEN	FIREPLACE	OVERRIDE	HOLIDAYS
Intensity of supplied air	80%	60%	80%	Ventilation unit will turn on for 30 minutes several times a day. At other times, the ventilation unit is switched off. Ventilation intensity 20%.
Intensity of extract air	20%	50%	80%	
Set temperature	20°C	20°C	20°C	20°C

These settings may be changed (see "Control and Settings").

[1] C6M controller software version must be C6_1_5_36_54 or later, and for control panel – C6_1_slim_1_1_4_37 or later.

2.5. ECO mode

ECO – an energy saving mode intended for minimizing power consumption. Power consumption is reduced by turning off heating/cooling devices, making maximum use of outdoor air or decreasing fan speed. During ECO mode:

- Electrical heater is blocked, all other external air heating/cooling devices are switched off.
- Rooms are cooled/heated with the outside air without a recuperator when the outside air temperature falls within the set temperature range.
- When supply air temperature is below a set minimum value (in winter) or exceeds a maximum value (in summer), the unit attempts to maintain the air temperature by decreasing ventilation intensity.

Setting the temperature range, switching off recuperation or heating/cooling devices may be done in the ECO mode settings (see chapter "Control and Settings").

The following options are available in the "Heat recovery control" setting:

Auto – the heat exchanger operates normaly

Maximum – the heat exchanger will be activated as soon as it is possible to return heat or cold from the premises, regardless of the desired temperature. The constant heat recovery will not work in case when free cooling/heating mode is in operation.

Non stop – the heat exchanger will be active all the time, regardless of any temperature conditions. This type of management is recommended when an enthalpy (rotary or counter-flow) heat exchanger is used and priority is given to maintaining air humidity rather than temperature (e.g. in summer to prevent humid air from entering the premises).

2.6. AUTO mode

During AUTO mode, ventilation intensity is adjusted by a weekly schedule or air quality in the premises, i.e. ventilation is activated only when necessary or desired.

2.6.1. Weekly operation schedule

If you want the unit to operate when you need it, you can create a weekly operation schedule. The unit has 3 default weekly operation schedules tailored to different situations. Also, you can create your own schedule:

Working week	Office	Stay at home
At night the unit operates in *AWAY* operation mode, and in the morning or evening it switches to *NORMAL* operation mode. The unit is switched off during the working day.	The unit operates only during the working days: in *NORMAL* operation mode until noon and in *INTENSIVE* mode in the afternoon. The unit is switched off during nights and weekends.	The unit operates all the time: in *AWAY* operation mode during the night and in *NORMAL* operation mode during the day.

Programs, times and days of a schedule may be changed (see chapter "Control and Settings").
Operation according to the weekly schedule is not available if the air quality function is activated (see below).

2.6.2. Air quality control function

Air quality control function activates ventilation only when necessary, i.e. when the air quality is poor. If the indoor air quality is good, the unit will ventilate at minimum speed or stop. Air quality in the premises may be controlled by impurity or humidity sensors connected to B8 and B9 terminals of the main board (see "Installation Manual").

Air quality control function is not available in DCV air flow control mode (see "Air Flow Control").
In this case, the unit will operate by a weekly operation schedule in AUTO mode.

As air impurity and humidity control methods slightly differ, the air quality control function is divided into:

- **Impurity control**
  Impurity function is controlled via the following sensors:
  CO_2 – carbon dioxide concentration sensor [0...2000 ppm];
  VOC – air quality sensor [0...100 %];

Air impurity function automatically selects ventilation intensity in the range of 20–70%, based on air quality readings. If air pollution is within the user-defined limits, fans will operate at minimum speed; as level of pollution increases, the unit will increase ventilation speed and supply more fresh air to the premises. It is also possible to stop the unit when air pollution is low. For this purpose, change a minimum ventilation intensity limit to 0% (see "Control and Settings"). Then the unit will turn on periodically (every 2 hours by default) to inspect the air quality, and will ventilate until pollution is reduced, if necessary.

Type of connected sensors and range of ventilation intensity may be modified (see "Control and Settings").

- **Humidity control**

Humidity control function allows dehumidification of air in the premises. Possible ways of dehumidification:

1. If outdoor humidity is measured via an additional humidity sensor, air in the premises will be dehumidified when humidity level outdoors is lower than indoors. Indoor humidity is monitored by a separate sensor connected to a controller board or integrated in a control panel. In the settings: set sensor type RH and select one of the connected sensors for measuring outdoor humidity (see "Control and Settings"). In AUTO mode fans are running at minimum speed as long as the indoor humidity is lower than the setpoint (see "Impurity Control"). When humidity outdoors is lower than indoors and dehumidification of the premises is necessary, the fan speed will be increased gradually and drier air will be supplied.

2. If no outdoor humidity sensor is used, "Humidity Control" function operates the same way as the "Impurity Control" function but instead of an air quality sensor, optional humidity sensor connected to the controller or integrated in the control panel is used.

3. If an external DX unit or a water cooler is used (activated in "Control Sequence Settings"), additional dehumidification is possible by cooling supply air. In this case, the supply air temperature setpoint is ignored and colder but drier air is supplied until the desired indoor humidity level is reached. If an outdoor humidity sensor is used and the outdoor air is drier, the unit will attempt lowering the indoor humidity by supplying drier outdoor air before activating cooling units. Dehumidification with cooling devices is possible both in AUTO and standard ventilation modes.

To use a DX unit or a water cooler for dehumidification of supply air, activate an option "Allow dehumidifying with cooling" (see "Control Sequence Settings"). An option to enter a value for desired humidity will appear in the settings of standard ventilation modes.

On units with a rotary heat exchanger, the air quality function may be temporarily stopped while the condensate prevention is in operation.

2.7. Protective functions

The air handling unit is equipped with several protective functions that affect the operation of the unit. The operator is not allowed to change these settings values. These functions protect the unit and its components against damage as well as provide protection for the building and people when the ventilation system is exposed to dangerous circumstances.

External fire alarm function stops the air handling unit as soon as a signal from the building's fire alarm system or smoke detectors is received. This immediately stops ventilation and fresh air from entering fire zones to prevent fire from spreading. Fire alarm message is displayed on a control panel or other device used for controlling the air handling unit. In case of false fire alarm, for example, due to fire protection system inspections, the air handling unit will need to be restarted after turning off the signal and clearing the fire alarm message. If such tests are run periodically, authorized service person may program the air handling unit to start in the previous mode after turning off the fire alarm.

Connection of the building's fire protection system signal is described in the "Installation Manual".

Internal fire alarm function stops the air handling unit when air temperature increase is detected inside the unit. This can happen, for example, when hot smoke enters the duct system from fire zones both inside and outside the building. This function prevents smoke from spreading inside the premises and warns about a potential fire hazard if the building's fire protection system has not yet responded. If the air handling unit is intended for operation in high temperature premises (for example, in drying chambers, bakeries, etc.), this function may be disabled. This can be done by authorized service person.

Electric heater overheat protection consists of several different control algorithms. Integrated thermostat disconnect electric heater's power supply if its temperature reaches a critical limit (e.g., in case of heater's control electronics failure). Depending on the unit model, the electric heater may contain one of the following thermostats is installed:

- Automatic thermostat 70°C which prevents heating tubes from overheating when the heater is running at high power and low airflow speed. Protection is restored as soon as the heater cools down and thermostat temperature drops. Heater operation is restored automatically.
- Manual reset thermostat 100°C. This thermostat, in case of overheating, completely disconnects the heater's power supply to protect control electronics and adjacent plastic components. Protection may be reset by pressing the RESET button inside the unit (see Chapter "Troubleshooting").

Eliminate the cause of overheating before restoring the manual reset thermostat of 100°C.

Also, the operation of integrated electric heaters and their possible failures are monitored by measuring the actual electric current and the air temperature before and after the heater.

Fan cooling of heating/cooling devices. If the air handling unit is stopped while electric heater or direct evaporation (DX) unit is still running, fan cooling is initiated. Fans run at fixed speed until heater tubes cool down or DX unit's refrigerant pressures stabilize. Blowing time depends on the accumulated heat/cold and ventilation intensity and can take up to 15 minutes.

Water heater frost protection function measures water temperature returning from the heater coil. At low outdoor temperatures, when there's a risk of water freezing, a 3-way water mixing valve is opened and hot water pump is started to prevent temperature of water inside the heater from dropping. If temperature of water returning from the heater coil still falls below the critical limit, the unit is stopped and outdoor air dampers are closed to prevent cold air from entering the unit.

When operating air handling unit in the temperatures lower than 0 °C, it is necessary to use water-glycol mixture as a heat carrier or to maintain a return water temperature of at least 25 °C.

Counterflow heat exchanger frost protection[1]

The heat transfer and condensation occurring in the counterflow heat exchangers creates a possibility for it to freeze at low air temperatures. The air handling units have several measures to reduce the risk of freezing. On such units, when the outside temperature drops to -4°C, preheater (integrated or external) can be activated. Capacity of the preheaters is regulated based on the outdoor air temperature, airflow and the amount of moisture in the extracted air. If the indoor humidity is very low, it is likely that there will be no danger of the heat exchanger freezing even at very low temperatures outside.

To ensure proper operation of the pre-heater, a control panel or a separate humidity sensor must be installed in the ventilated premises (see "Installation Manual").

If you don't want to use the preheater for some reason, the anti-icing protection can be turned off. In this case, the air handling unit will be stopped when the outside air temperature is lower than -4 °C, thus protecting the heat exchanger from damage.

If, at very low outside air temperatures, the power of the preheater is not sufficient, both fans will be slowed down gradually, to protect the heat exchanger from freezing.

How to enable/disable the function or change its settings, read the "Advanced settings" clause.

Condensate prevention on the units with rotary heat exchanger[2]

If there is high humidity in the exhaust air (for example in a newly built house), in winter condensate can start to accumulate inside the unit and eventually will freeze. The protective function will automatically reduce the ventilation intensity in winter, in cases when indoor humidity is too high and there is a risk of condensation on the internal walls of the unit. When the condensate prevention is active, the airflow reduction symbol will be displayed on the control panel (see section "Control panel C6.1").

How to enable/disable the function, read the "Advanced settings" clause.

3. CONTROL AND SETTINGS

Ventilation unit may be conveniently controlled via the following ways:

- Control panel
- Mobile app
- Web browser

Air handling unit (based on its equipment) may have one of the following control panels:

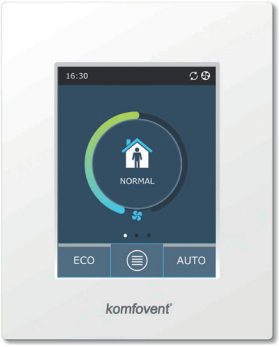

C6.1

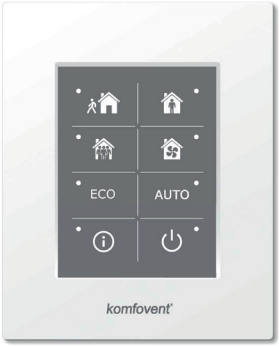

C6.2

[1] Only on CF units.
[2] Only on R type units.

UAB KOMFOVENT we reserve the right to make changes without prior notice

3.1. Control panel C6.1

Panel with a colour touch-sensitive display. This control panel is designed for indication and changing of various functions and settings of the unit. If the unit is connected to the mains, the control panel will display home screen or a screen saver that you can switch off with a single tap. Touch-sensitive display reacts to soft taps, therefore, do not use any sharp tools (screwdrivers or pens), also do not apply excessive force as it may damage the display.

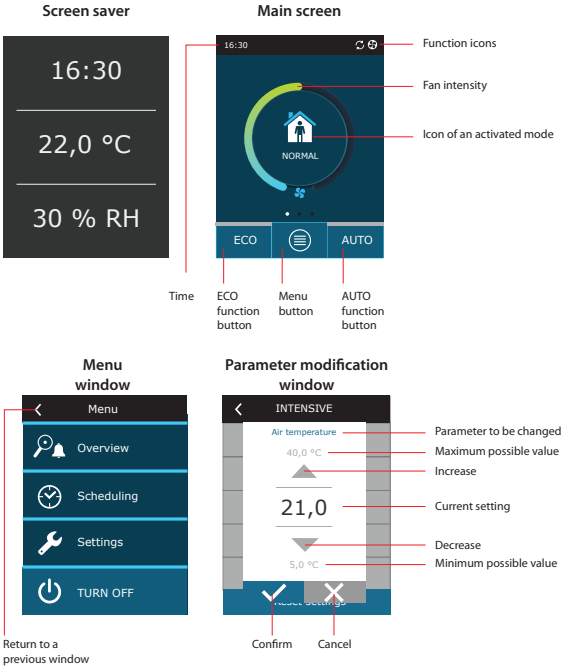

Displayed symbols on the panel

	Fan operation		ECO mode on. Free heating operation.
	Energy recovery operation		Alarm signal (see the troubleshooting section)
	Air heater operation		Supply air
	Air cooler operation		Exhaust air
	There is a heating demand, but it is being blocked by the ECO mode		Outside air temperature
	There is a cooling demand, but it is being blocked by the ECO modes		Air filters
	Air flow reduction		Instant heat recovery of the air handling unit
	ECO mode on. Free cooling operation.		Instant power consumption of the air handling unit

3.1.1. Parameter overview

Swipe the main window to the side to see various parameters: air flow, temperatures, filter contamination, energy recovery and power consumption.

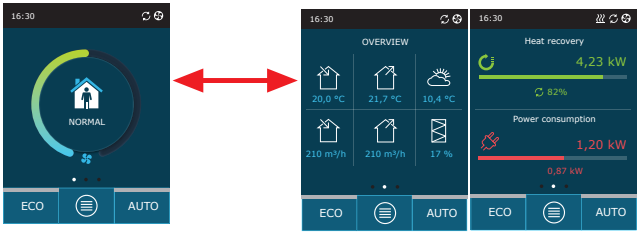

See menu section "Overview" for more parameters.

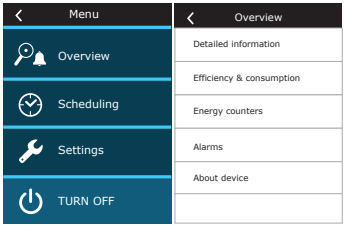

3.1.2. Turning on

The unit must be switched on to operate by a selected ventilation mode, schedule or air quality.
To turn on your air handling unit:
1. Press the ON/OFF button in the centre of the home screen.
2. Confirm the message that appears.
3. A symbol will appear in the centre of the home screen indicating an operating mode which will start soon.

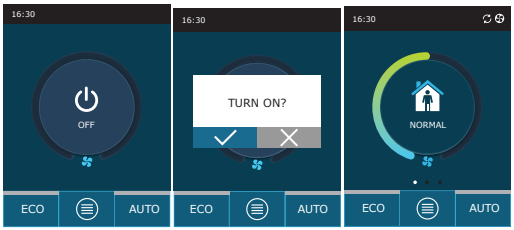

3.1.3. Turning off

If you want your device to stop working, regardless the operation schedule and other functions, you can turn it off.
To turn off the device:
1. Press "Menu" button at the bottom of the home screen.
2. Press the ON/OFF button at the bottom of the menu window.
3. Confirm the message that appears.
4. Press a return icon at the top of the window to return to the main screen.

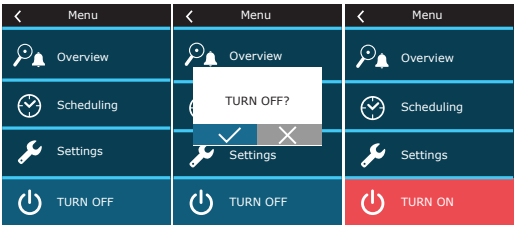

3.1.4. Thermostat function window[1]

Perform the following steps to use a control panel as a thermostat (to switch on/off external devices according to the control panel temperature):
1. Swipe the main window to the side one time (if ventilation is stopped) or three times (if AHU is working).
2. Press on the house icon in the centre of the window.
3. Put a check mark at the top of the displayed message.
4. Select a desired room temperature and confirm.
5. If the actual control panel temperature is lower than the set value, the control of the external device will be activated and a function operation icon will be displayed in the function window (3 waves).

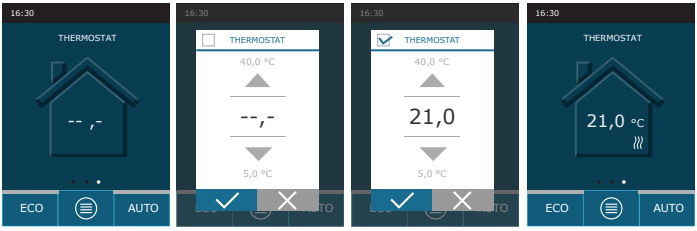

Thermostat function can also be active when the device is stopped.

3.1.5. Mode change

To turn on a standard ventilation mode:
1. Press an icon indicating the current operation mode in the middle of the home screen.
2. Select and press a desired operation mode.
3. An icon for the selected operation mode appears in the middle of the home screen.

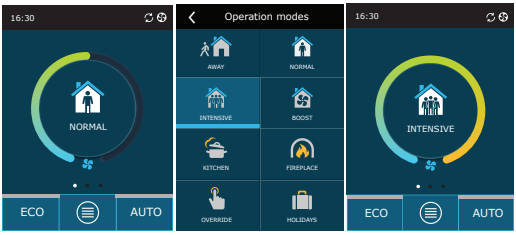

[1] This window is displayed only with "Thermostat function" active (see "Advanced settings").

To turn on a **special ventilation mode**:
1. Press an icon indicating the current operation mode in the middle of the home screen.
2. Select and press a desired special operation mode.
3. Use the arrows to select desired operation duration and press to confirm.
4. Press the return icon at the top of the screen to return to the home screen.

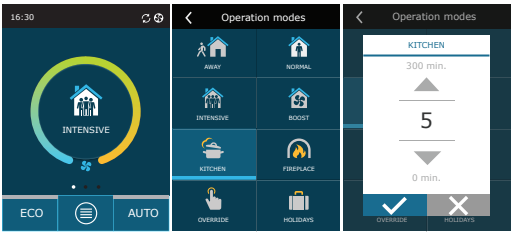

When operating in a special mode, air flow is maintained by CAV method, regardless the selected air flow control method.

To activate ventilation by a weekly schedule[1]:
1. Press “Menu” button at the bottom of the home screen.
2. Press “Planning” button in the menu window.
3. Use the arrows at the bottom of the window to select a desired weekly schedule.
4. Press a return icon at the top of the window twice to return to the home screen.
5. Press AUTO button to activate scheduled ventilation.
6. Information about upcoming changes in the schedule is displayed at the top of the screen.

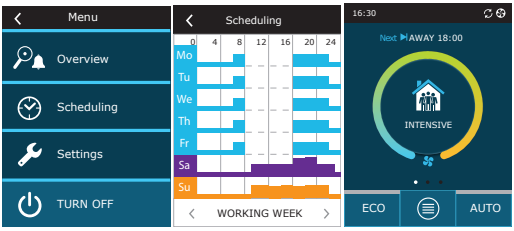

[1] Ventilation by a weekly schedule is not possible when air quality control function is activated.

UAB KOMFOVENT we reserve the right to make changes without prior notice

3.1.6. Airflow and temperature settings

You can set air flow for supply and exhaust air, desired temperature and turn off/on an electric heater for each ventilation mode. If turned off, the heater will not turn on even when the desired temperature is not reached. If turned on, the heater will operate only when a heat exchanger alone cannot reach the set temperature.

To change the ventilation mode settings:
1. Press an icon indicating the current operation mode in the middle of the home screen.
2. Press a desired mode button and hold it for 5 seconds.
3. Press a parameter you want to change.
4. Use the arrows to select a desired value and press to confirm.
5. Press a return icon at the top of the screen to return to the home screen.

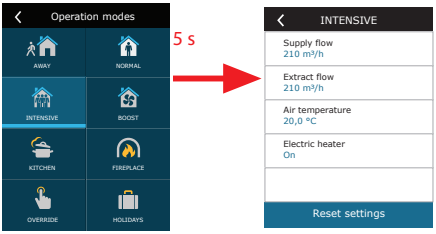

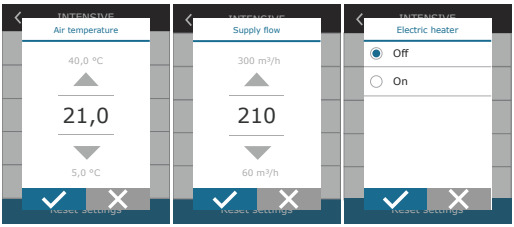

3.1.7. Air quality control mode activation and settings

If air quality sensors are connected to the main board or impurity control/moisture control function is activated (see “Advanced Settings”), button “Scheduling” appears instead of “Air quality” button. For more information about the air quality control function see chapter “Air Quality Control Functions”.

To enter desired limits and turn on ventilation by air quality:
1. Press “Menu” button at the bottom of the home screen.
2. Press “Air quality” button.
3. Select a parameter you want to change.
4. Use the arrows to select a desired value and press to confirm.
5. Press a return icon at the top of the screen to return to the home screen.
6. Ventilation by air quality is turned on by pressing AUTO button while the unit is operating in any ventilation mode.
7. If the unit was stopped, pressing AUTO button will call up a message, the confirming of which will activate ventilation by air quality.

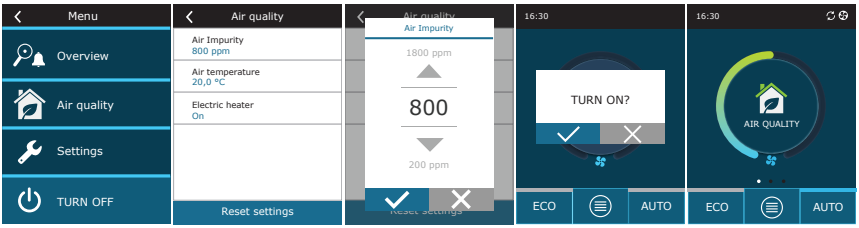

3.1.8. ECO mode activation and settings

ECO mode may be activated in any ventilation mode by pressing ECO button at the bottom of the home screen. For more information about the ECO mode see chapter “Air Quality Control Functions”.

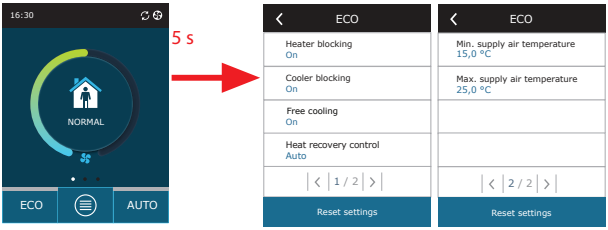

To change the ECO mode settings:
1. Press ECO button and hold it for 5 seconds.
2. Press a parameter you want to change.
3. Select a desired option or set a desired value using arrows.
4. Confirm your selection.
5. Press a return icon at the top of the window to return to the home screen.

3.1.9. Creating a weekly operation schedule

You can modify ventilation modes, operation time and day for all default operation schedules.
To modify settings of a default schedule:
1. Select a weekly schedule as shown in Chapter “Mode Change”.
2. Press the centre of the schedule window and hold for 5 seconds.
3. By pressing the weekday row you can select which days of the week this schedule sheet is valid for.
4. Pressing the ventilation mode icon on the left will allow selecting a desired ventilation mode.
5. Press time of a specific ventilation mode to change the operation start and end times.
6. Press X on the right to delete a row (ventilation mode and operation start/end times) from a schedule.
7. To add an additional row, press + under the last scheduled row (maximum 5 rows). If the last event ends at 24:00, you will have to delete it to add a new row.
8. To add another sheet, press + at the bottom of the window (maximum 4 sheets).

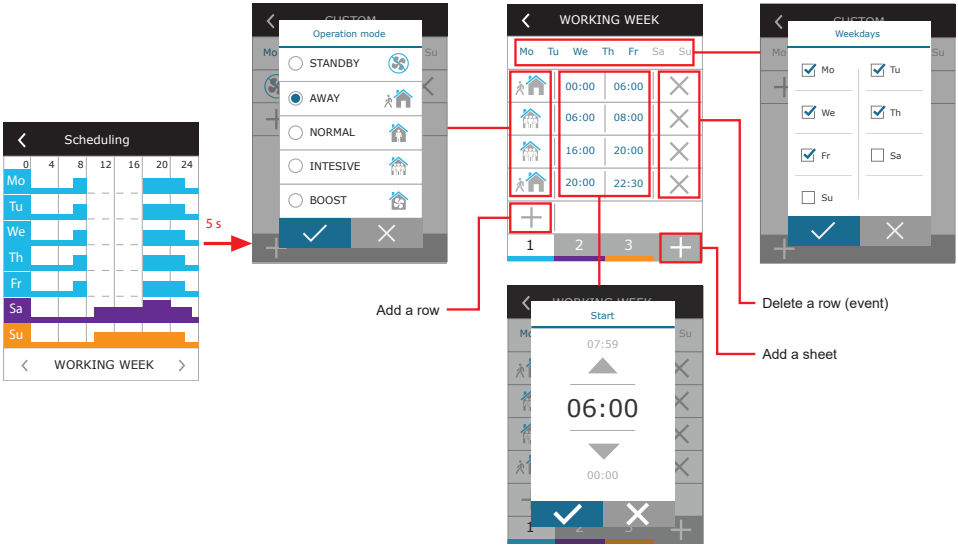

UAB KOMFOVENT we reserve the right to make changes without prior notice

To create a weekly operation schedule:
1. Select a weekly schedule "My week" as shown in Chapter "Mode Change".
2. Press the centre of the schedule window and hold for 5 seconds.
3. Press the weekday row to select which days of the week this schedule sheet is valid for.
4. Press + symbol and add a new row.
5. Press the ventilation mode icon on the left to select a desired ventilation mode. There is no need to include a STANDBY mode in the schedule for intervals when the unit will not operate. The unit will be stopped during any intervals for which no ventilation mode is assigned.
6. Set the start and end time for a ventilation mode. If you need 24-hour ventilation, set the start time for 0:00 and the end time for 24:00.
7. To add an additional row, press + under the last scheduled row (maximum 5 rows). If the last event ends at 24:00, you will have to delete it to add a new row.
8. To add another sheet, press + at the bottom of the window (maximum 4 sheets).

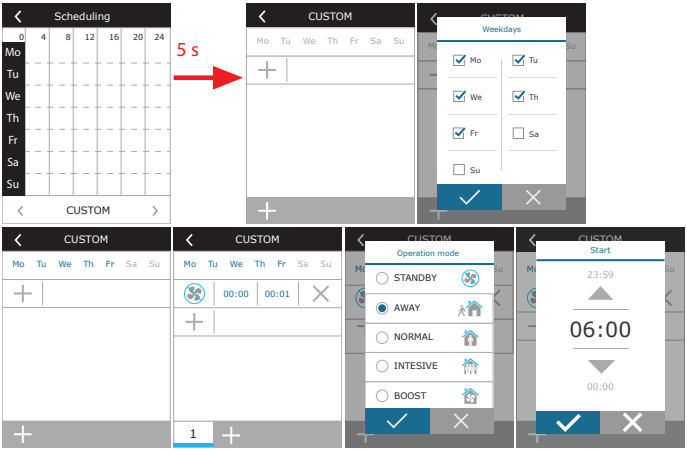

3.1.10. Main settings

In the menu point SETTINGS you can modify the main user interface settings:

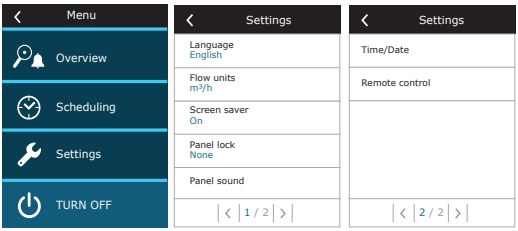

Language – set a desired control panel language using arrows.
Flow measurement units – select units for air flow measurement.

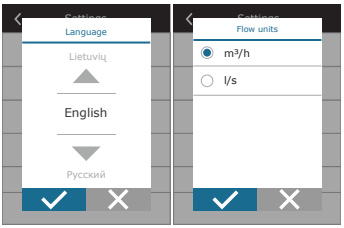

Screen saver – turn the screen saver on/off. Screen saver activates when a control panel is not used for longer than 1 min. You may select brightness of a screen saver, as well as settings and the order in which they are displayed. If a screen saver is deactivated, the control panel display turns off if not used for longer than 1 min. Tap a screen to wake-up.

Panel lock – partial or full panel lock is available. Partial lock allows turning on/off an air handling unit and selecting desired ventilation mode but does not allow any ventilation settings to be changed. Full panel lock prevents the user from using the control panel. To unlock the panel, you have to enter your four-digit PIN code. When the lock is on, the panel will lock every time the screen saver is activated.

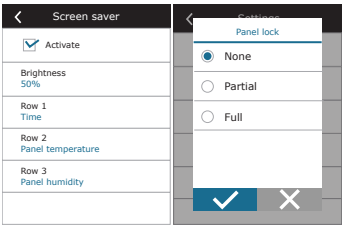

Panel sound – turning on/off touch and message sounds.
Time/Date – setting the time and date that are used for a weekly operation schedule or other functions.

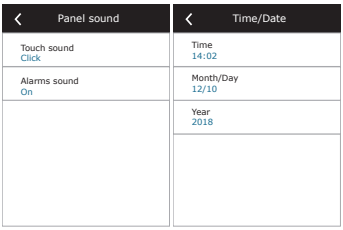

Remote control – settings for remote access to the air-handling unit.

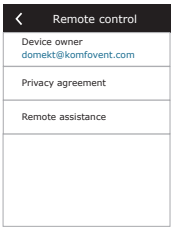

- **Device owner.** If the unit has been added to an account by an unknown person (e.g. an installer or a previous occupant of the same dwelling with a ventilation unit), their account can be removed from the unit by pressing the "Remove" button.

If you do not accept or decline the privacy policy, you cannot control the device with your smartphone or receive remote assistance from an authorized service representative.

- **Privacy agreement** – after pressing the button, you will see a QR code, that can be scanned with a smartphone. After reading the privacy policy it can be accepted or declined.
- **Remote assistance** – by activating this feature, you can provide remote access to maintenance personnel or service representatives, e.g. in case of unit breakdown. Read more about this option in the "Troubleshooting" section.

3.1.11. Advanced settings

To access the advanced settings, press and hold the SETTINGS button for 5 seconds.

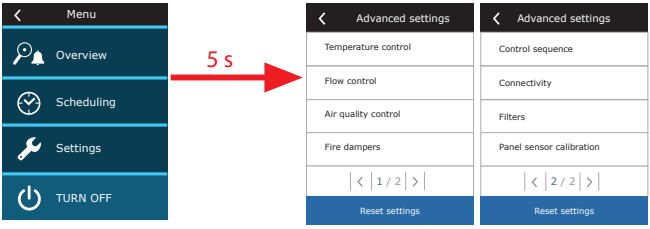

Temperature control – select a method for temperature control (see Chapter 2.2).

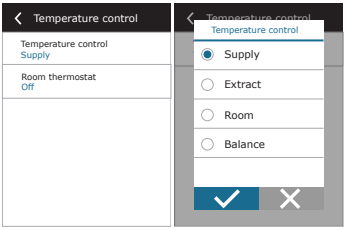

Room thermostat – here you can set parameters for proper operation of the thermostat function (see "Thermostat function"). You can set a desired control panel temperature, which will be reached by activating an external unit. You also can select hysteresis (temperature difference that activates the function). For example, if you set the desired control panel temperature to 23 °C and the hysteresis to 1 °C, the external unit will turn on when the room temperature drops to ≤ 22 °C and turn of when it rises to ≥ 24 °C. In the output field select which terminals of the C6M controller board will be used to turn on/off the external device (see "installation Manual") and select the output type: NO – normally open contact, NC – normally closed contact.

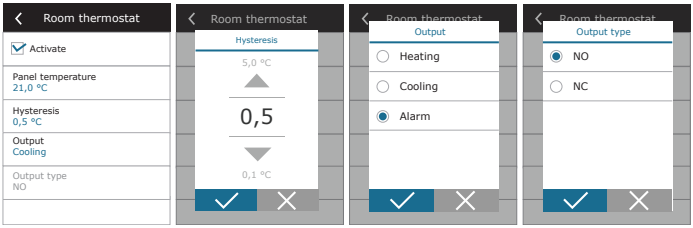

Settings in the output window refer to the terminal names of the controller, not the operation conditions of the thermostat function.

After activating the function in this menu, a new window THERMOSTAT will appear in the main window (see "Thermostat function window").

Flow control – select a method for air flow control (see Chapter 2.1). Selected CAV or DCV air flow control allows additional corrections of supply and extract air measurements, when the measured air volume does not match the actual one. This may also be due to design features of the duct system, for example, wrong diameter ducts, excessive number branches or elbows, or installation without following the installation recommendations. When a VAV mode is selected, a measurement range of pressure sensors connected to the main board must be additionally entered (see "Installation Manual"), i.e. maximum pressure Pa that the sensor is measuring by 10V output (measurement range is specified in the VAV sensor manual).

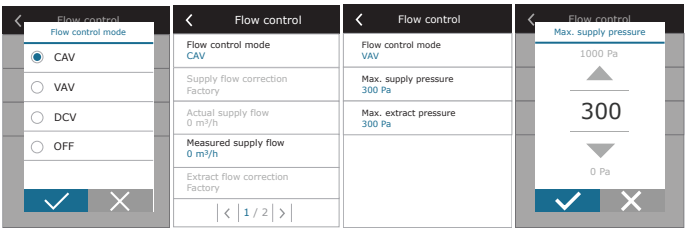

Air quality control – here you can activate and set-up air quality control which will be used in AUTO mode (see Chapter 2.6.2).

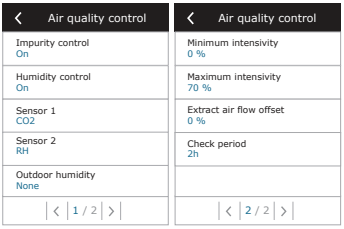

- **Impurity control** – turning on/off an impurity control function. At least one CO2 or VOC sensor must be connected to the controller board to activate this function (see Chapter 2.6.2.). If ventilation by a weekly schedule is required, this function must be turned off.
- **Humidity control** – turning on/off a humidity control function. Humidity control function requires a humidity sensor. If no humidity sensor is connected to the controller board, sensor integrated in a control panel will be used for this purpose (see Chapter 2.6.2.).
- **Sensor 1** – specify the type of the sensor connected to a terminal B8 (see "Installation Manual"). If this sensor is not available, select "None".
- **Sensor 2** – specify the type of the sensor connected to a terminal B9 (see "Installation Manual"). If this sensor is not available, select "None".
- **Outdoor humidity** – this option appears when one of the sensors is of RH type (humidity sensor). If any of the connected sensors are installed in the outdoor air flow, specify which one. If none of the installed humidity sensors measure the outside humidity, select "None".

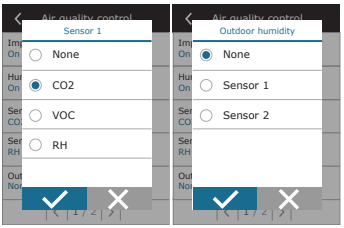

- **Minimum intensity** – select ventilation intensity at which the unit will operate when air quality (impurity or humidity) is good. If 0% is selected, the unit will stop when air impurity level is low.
- **Maximum intensity** – select ventilation intensity limit, under which the unit will operate when air quality (impurity or humidity) exceeds a defined value.
- **Extract air flow offset** – If you want the supply and extract air flow disbalance during air quality function operation, enter the percentage by which the extract air fan speed should differ in proportion to the supply air.
- **Check period** – specify how often the unit shall turn on to check air quality, when minimum intensity is set to 0%.

UAB KOMFOVENT we reserve the right to make changes without prior notice

Control sequence – here you can activate additionally connected duct-mounted heating or cooling devices (see "Installation Manual") that will operate only when a heat exchanger or electrical heater alone cannot reach a desired temperature.

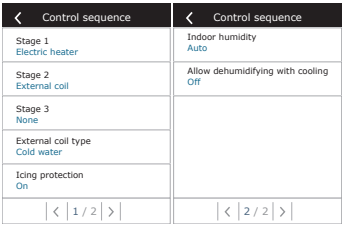

Numbers indicate the order of activation. All units have an integrated electrical heater, therefore it is factory-assigned as Stage 1. You can also assign an "external coil" (duct-mounted water heater/cooler) or an "external DX unit" (direct evaporation heat exchanger) as a stage. If an external coil is selected, you also must specify its type: "Hot water" (used for heating), "Cold water" (used for cooling) or AUTO (both for heating and cooling). If AUTO type is selected, heating or cooling operations are decided by an external signal connected to the controller board terminals (see "Installation Manual"). If additional heating/cooling devices are not available, you do not want to use them or an electrical heater, select "None".

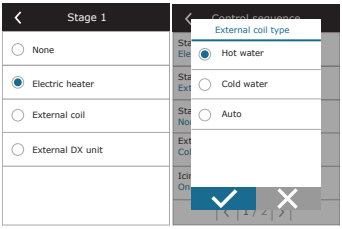

If you turn off an electric heater and do not activate a duct-mounted heater, the desired air temperature may not be reached when the outside air is cold.

You will not be able to select an external DX unit if the thermostat function is used and heating or cooling terminals are selected in the output settings thereof. If you want to use a DX unit, select ALARM terminals for the thermostat output (see "Thermostat function").

- **Icing protection on CF units** settings are available:
  On – automatic protection with an integrated pre-heater is activated by default.
  Off – protection may be switched off, but the unit will also be turned off when the outside air temperature drops below -4 °C.
  External coil – when an external heater, connected to AUX terminals of the main board, is used instead of an integrated pre-heater (see "Installation Manual").

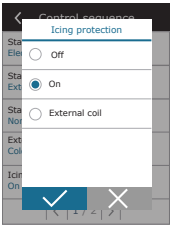

- **Condensate prevention on R units** has the following settings:
  On – Automatic condensate prevention is activated by default and will reduce ventilation intensity if needed (see “Advanced settings”).
  Off – Condensate prevention will not work and user-defined airflow will be maintained.

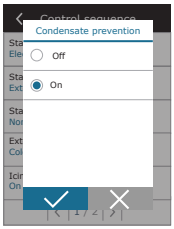

- **Indoor humidity** – this setting is required to determine freezing conditions.

  Possible settings:
  Auto – indoor humidity is set automatically using an integrated in the control panel humidity sensor and/or external humidity sensors connected to B8 and B9 terminals of the controller (see “Installation Manual”).
  10...90 % – setting a fixed indoor humidity value is possible when a control panel is installed in inappropriate location (or is not used) and no outside humidity sensors are connected.

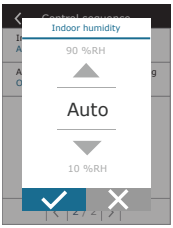

Wrong value of indoor humidity may cause antifreeze protection to malfunction.

- **Allow dehumidification with cooling** –this setting must be enabled to use a DX unit or duct-mounted water cooler to dehumidify the supply air. An option to enter a value for desired humidity will appear in the settings of standard ventilation modes (see Chapter 2.6.2).

  Connectivity – you can configure your PC network settings for remote use via web browser: IP address and subnet mask. You may also change other network parameters, if necessary: Gateway and BACnet ID. DHCP option automatically assigns a free IP address in the local network (do not use this option if you connect your computer directly to the unit).

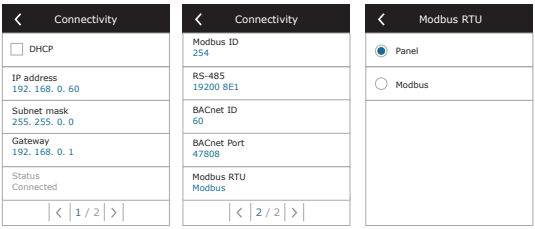

UAB KOMFOVENT we reserve the right to make changes without prior notice

„Status“ line shows connection between AHU and internet:

- **Disconnected** – AHU is not connected to LAN or internet network.
- **No internet access** – AHU is connected to LAN network and communicates with router, but internet is not accessible.
- **Connected** – AHU has internet access.

In the „Modbus RTU“ line, it can be selected what device is connected to the terminals 20-21 of the C6M main board (See Domekt installation manual). Additional control panel for AHU, building BMS system or external fire damper controller can be used. If mentioned terminals on the board are not used, do not change this setting and leave it as “Panel”.

Panel sensor calibration – If the temperature and/or relative humidity measured by internal control panel sensors do not match the parameters measured by other devices, the accuracy of the sensors can be adjusted in this menu. The measured temperature may be adjusted within ± 5 ° C and the humidity within ± 20% range.

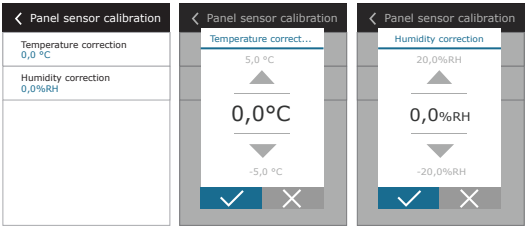

Filters. Here you can set outdoor air quality parameters or perform new filter calibration:

- **Outdoor air quality.** The time it takes for air filters to get dirty depends a lot on the environment in which the building is located. If the ambient air is very polluted, the filters will get dirty much faster and will need to be replaced more often. If the air quality of the environment is good, the filters will last longer. Since the air handling unit does not measure outdoor air quality, it can be specified in this menu, thus filter contamination messages will be more accurate.
- **Clean filters calibration.** After replacement, you must reset a filter timer by clicking this button.

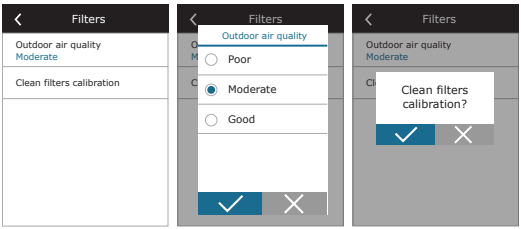

Reset settings – allows restoring factory settings.

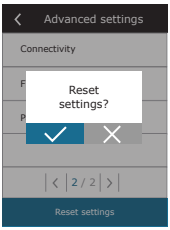

3.1.12. Alarms

Messages appearing during operation are indicated by a red warning symbol in the home screen. Device operation may be stopped given the severity of a fault message. To read a message, press OVERVIEW section in the menu. You can also delete current alarms or view a recorded history of faults (up to 50 recent messages).

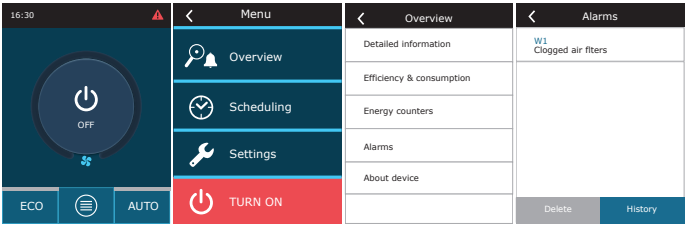

For more information and tips on alarms see Chapter "Troubleshooting".

3.1.13. About device

In the „Overview" screen, menu „About device" displays information about AHU type, firmware versions and serial number. By pressing C6 ID line, QR code will be generated, that can be used when connecting via Komfovent Control mobile app.

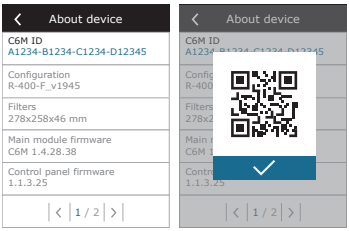

Update firmware. This button will only be visible when the ventilation unit is connected to the Internet and there is a newer firmware version than the one already stored in the controller. By pressing the button, the newer firmware will be automatically downloaded and installed into the ventilation unit. You will see the progress of the program update on the control panel screen.

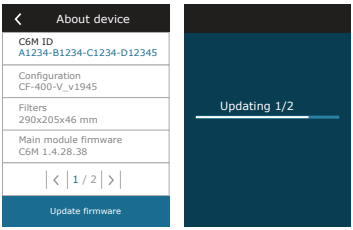

- **Stop the air handling unit before starting the firmware update.**
- **If the Internet connection is lost during the firmware update, the update will be stopped and will restart automatically when the connection is restored.**
- **Make sure that the power supply will not be interrupted during the update, otherwise, the update will fail and the controller's main board may be damaged.**

UAB KOMFOVENT we reserve the right to make changes without prior notice

3.2. Control panel C6.2

Simple and user-friendly control panel for intuitive navigation and control of the unit. This control panel offers 4 standard operation modes (see Chapter 2.3) and switching ON/OFF with a touch of a button without any additional settings (settings are pre-set in the factory). This control panel is recommended for application when the user is not allowed to change any device settings or air temperature (for example, in the children's room). To change operating settings you will have to connect a C6.1 control panel, computer or smart phone to the unit.

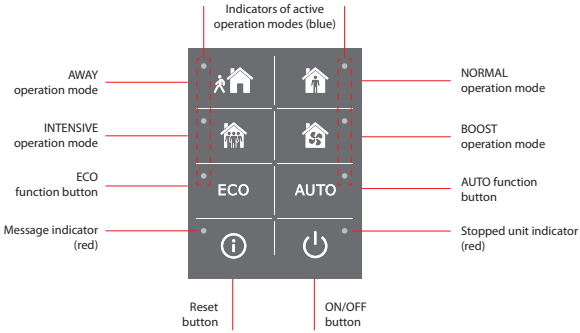

3.2.1. Turning on/off and changing operation modes

Red indication lamp lights up near the ON/OFF button if the unit is connected to the mains and currently is stopped.
To turn on/off the unit or to select an operation mode:
1. Press a button of a desired operation mode and the unit will start working.
2. A blue indicator light will turn on near the activated operation mode.
3. To turn off the device, press the ON/OFF button.
4. Once the unit is stopped, a red indicator light will turn on near the ON/OFF button.

3.2.2. Messages

In case of any fault messages during operation of the unit, a red indication lamp will light up near the reset button. Depending on the message type, the indicator may light up or blink (see Chapter "Troubleshooting"). To delete the message, press and hold the reset button for 5 seconds.

3.2.3. Control panel sounds

When a message appears, the control panel notifies the user with a beep. You may temporarily disable an audible alarm by pressing the reset button or deleting a fault message.
To disable audible alarms perform the following:
1. Press the ON/OFF button and hold for 5 seconds until you hear a beep and a red indicator light starts blinking.
2. If you hear a fault alarm and the reset button lights up in red, briefly press the reset button to turn off an audible alarm.
3. If the fault alarm is not audible and the reset indicator does not light up, briefly press the reset button to turn on an audible alarm.
4. To save your changes, press the ON/OFF button and hold it for 5 seconds until you hear a beep. Briefly press the ON/OFF button to return without saving.

3.2.4. Keypad lock

Control panel may be locked to protect against unauthorized access. Pressing the reset and ON/OFF buttons at the same time and holding for 5 seconds will inactivate the keypad. Perform the same procedure to unlock the keypad.

3.3. Control via smartphone

To control the unit via a smartphone, the “Komfovent Control” app is required. Before using the app, you will need to create an account and sign in. This can be done by visiting the *control.komfovent.com* website or directly within the app.

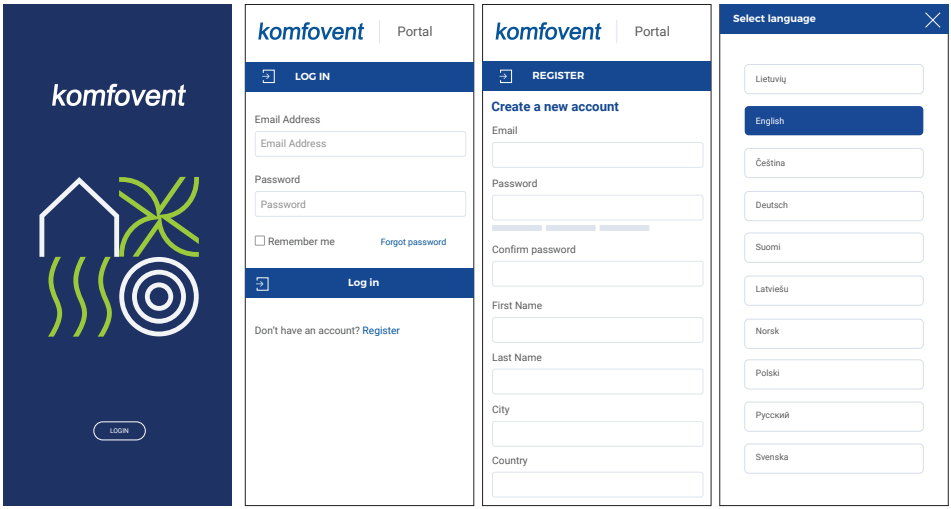

You will choose the app language when launching it for the first time. If needed, it can later be changed in the app settings.

Different languages can be used in the app and on the control panel.

3.3.1. Connecting to the unit using the “Komfovent Control” app

After connecting the unit to a network router with internet access, wait until the unit controller adapts to the local network. If you are using a control panel, you can check the connection status of the unit in the “Connectivity” window (see section “3.1.11 Advanced settings”) and view the assigned IP address:

If you do not have a control panel, after connecting the internet cable simply wait 3–5 minutes for the unit to synchronise with the network router.

The “Komfovent Control” app may not function if the network router and/or firewall settings do not support the UDP data protocol.

On your smartphone (the phone must have internet access), open the “Komfovent Control” app. If you are the owner of the ventilation unit, the built-in wizard in the app will help you add your first unit.

To add a unit, you will need to scan a QR code, which can be found:

- on the unit door;
- on the main control board (see the “Installation manual”);
- on the control panel (see section “3.1.13 About the unit”).

If, for any reason, the QR code cannot be scanned, the unit ID (indicated next to the QR code) can also be entered manually.

Only one owner of the same unit can be registered in the “Komfovent Control” app. If the unit has already been assigned to another “Komfovent” account, you will not be able to control it unless the owner shares its control from their account. If you want to connect to a ventilation unit whose control has been shared with you by the owner, simply skip the wizard.

If the unit has been added to an account by an unknown person (e.g. an installer or a previous occupant of the same dwelling with a ventilation unit), their account can be removed from the unit via the control panel (see section “3.1.10 Basic settings”) or within the local network by connecting directly to the unit through a web browser (see section “3.4.8 Settings”).

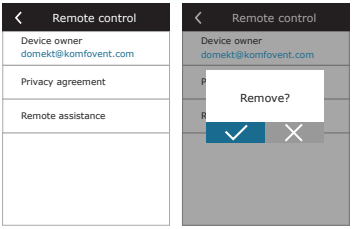

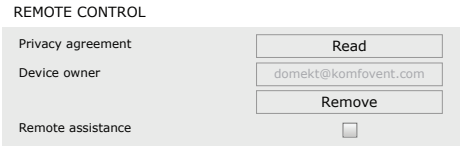

3.3.2. Main functions of the "Komfovent Control" app

After launching the app, you will first see the list of units assigned to you. Here you can add more units, change the app language, delete a unit, or rename it. To access the unit control interface, tap its image in the list.

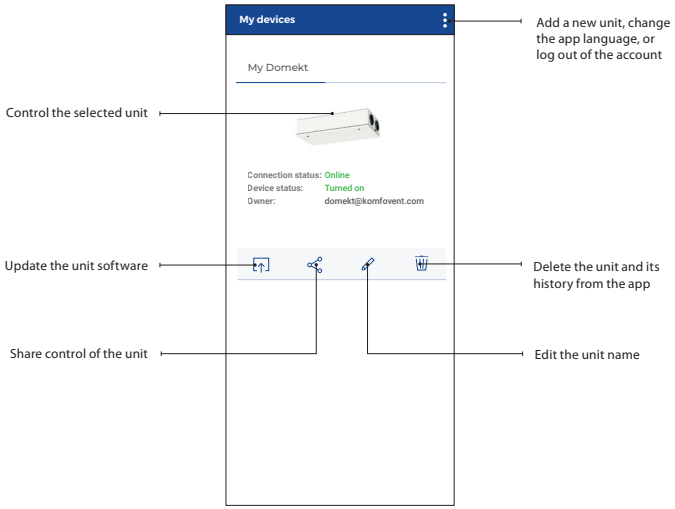

The app on a smartphone provides the user with the same unit control capabilities as when controlling it via a control panel or computer. Although the interface windows differ, the control modes, additional functions, and settings remain the same.

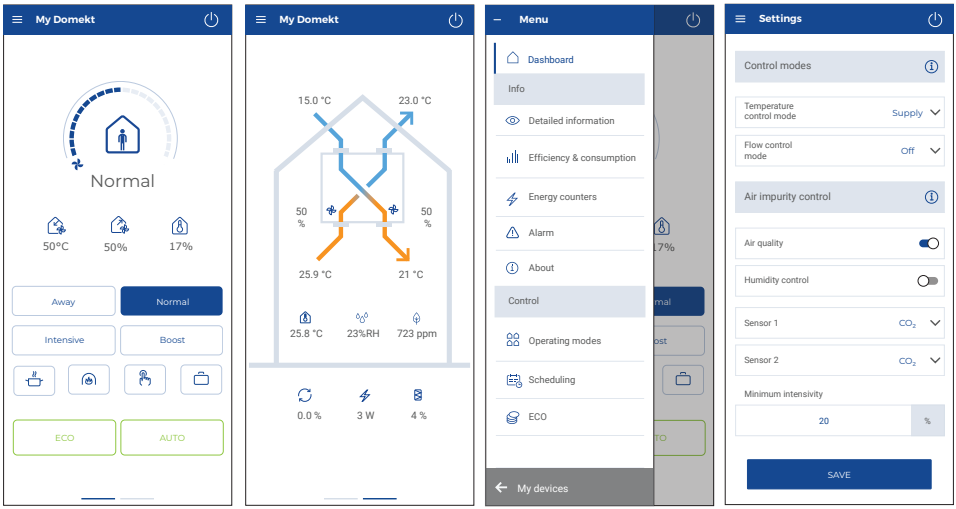

UAB KOMFOVENT we reserve the right to make changes without prior notice

3.4. Internet control

The unit can be controlled via the Internet using a computer on the website control.komfovent.com or a smartphone with the "Komfovent Control" app. Before controlling the unit, you will need to create an account and register. This can be done by visiting the control.komfovent.com website or directly in the mobile application (see "Control via smartphone").

Register on the *control.komfovent.com* website by entering your account details:

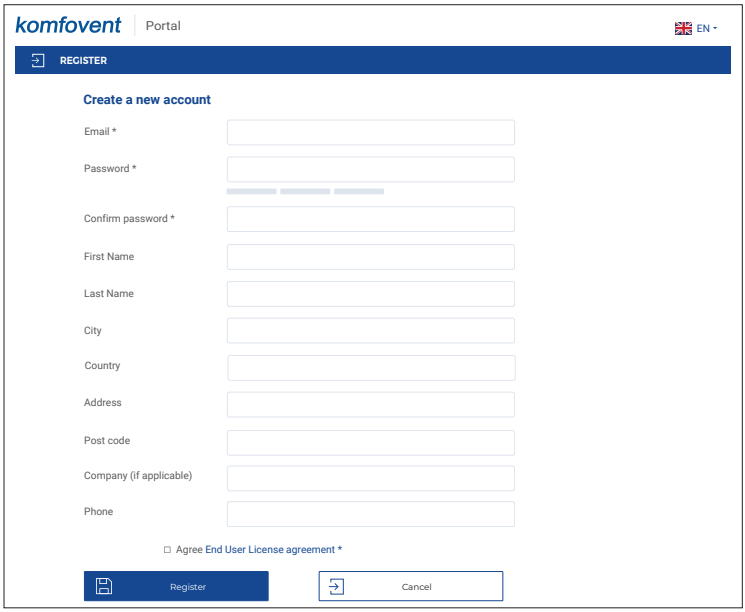

If you have added your ventilation unit in the "Komfovent Control" mobile app or if the unit owner has shared control with you, you will see a list of units here. To add your first or an additional unit, click the "Add new unit" button and fill in the required details.

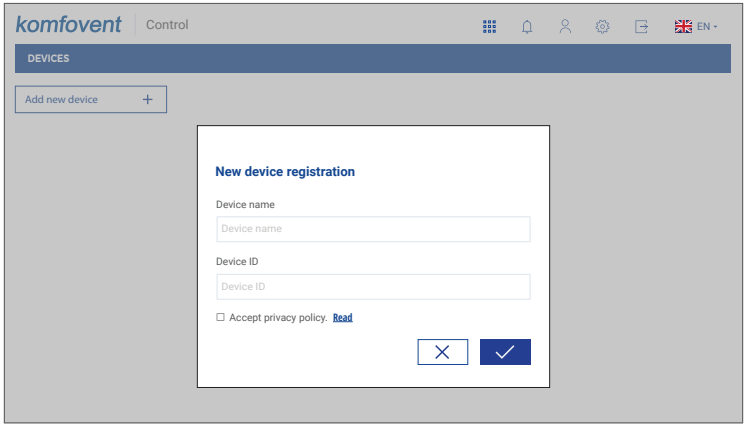

The unit ID can be found:

- next to the QR code on the unit door;
- on the main control board (see “Installation manual”);
- on the control panel (see section “3.1.13. About the unit”).

You will see all units you have added and those shared with you in the list. To control a unit, simply click on the image of the specific unit.

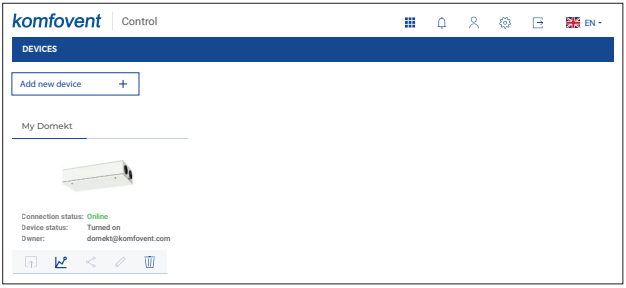

By clicking the settings button and selecting the “Owner notification settings” option, you can choose which unit notifications to display in the “Control” environment and which to receive by email.

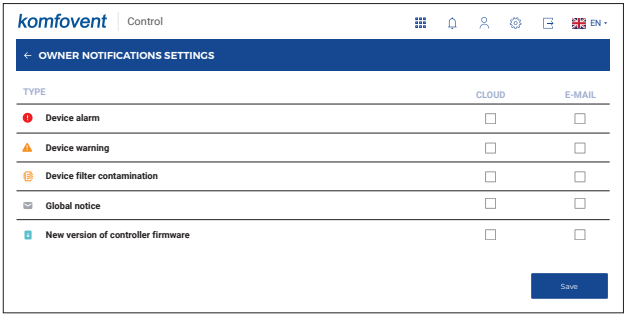

The unit control environment is almost identical to the “Komfovent Control” app and provides the user with the same capabilities as controlling the unit via a control panel or smartphone.

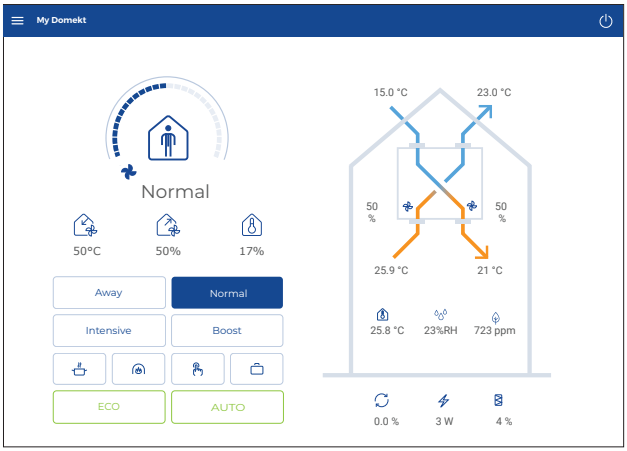

UAB KOMFOVENT we reserve the right to make changes without prior notice

3.5. Control via a computer without an internet connection

The device can also be controlled from a computer within a local network (without internet) or by connecting to it directly. For information on connecting the unit to an internal network or directly to a computer, see the "Installation Manual".

Enter the device IP address in your web browser (IP address is displayed in the control panel) (see Advanced settings -> Connectivity):

Connect to the C6 control panel interface: enter the user name ***user***, password ***user***[1] and press CONNECT.

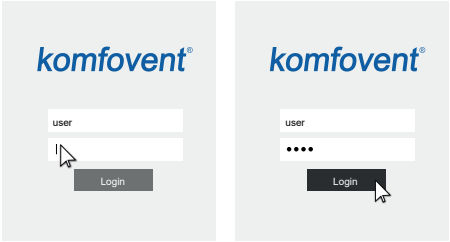

If the login was successful, you will be taken to the main window.

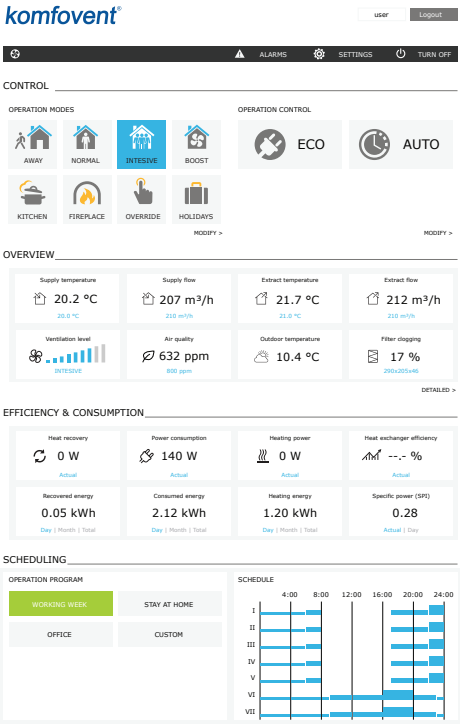

[1] Should you forget a changed password, it can be reset to the initial "user". To do this, you must restore the factory settings for the air handling unit using control panel.

3.5.1. Turning on/off and changing operation modes

Press any ventilation mode button to turn on the device. The unit starts operating and the button of the activated mode changes its colour. To stop the device, press the TURN OFF at the top of the main window:

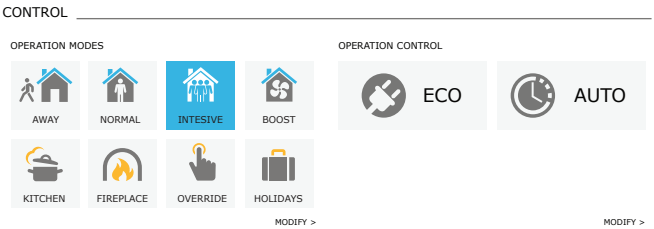

If you select a special operation mode, you will need to select the duration of operation. ECO and AUTO modes are activated by pressing buttons on the right side of the window. Button of a selected mode will change its colour:

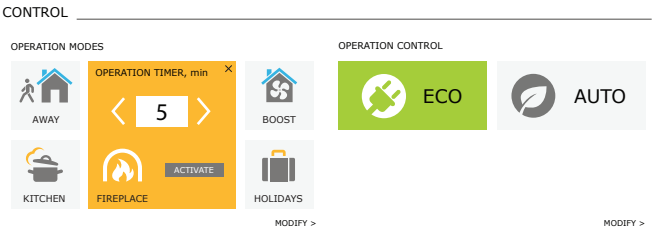

3.5.2. Parameter overview

OVERVIEW section displays the following parameters: temperatures, air volumes and filter contamination. To see more, press “Detailed Information”.

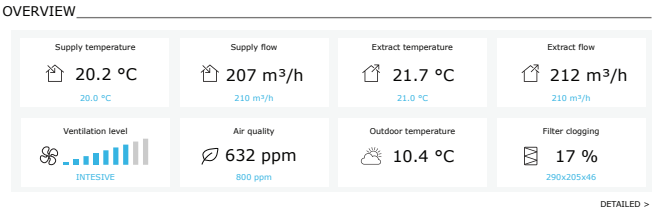

Section EFFICIENCY & CONSUMPTION displays measured and calculated power, power consumption and efficiency parameters. Daily, monthly, or total energy recovery and consumption is displayed by pressing buttons under a desired parameter.

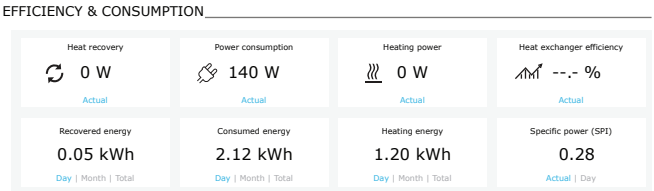

UAB KOMFOVENT we reserve the right to make changes without prior notice

3.5.3. Airflow and temperature settings

You can set air flow of supply and exhaust air, desired temperature and turn off/on an electric heater for each ventilation mode. If turned off, the heater will not turn on even when the desired temperature is not reached. If turned on, the heater will operate only when the heat exchanger alone cannot reach the set temperature. Press "Modify" to modify operation mode settings. After changing the settings, press "Save changes" button at the bottom of the window. Press the return symbol at the top to return to the main window.

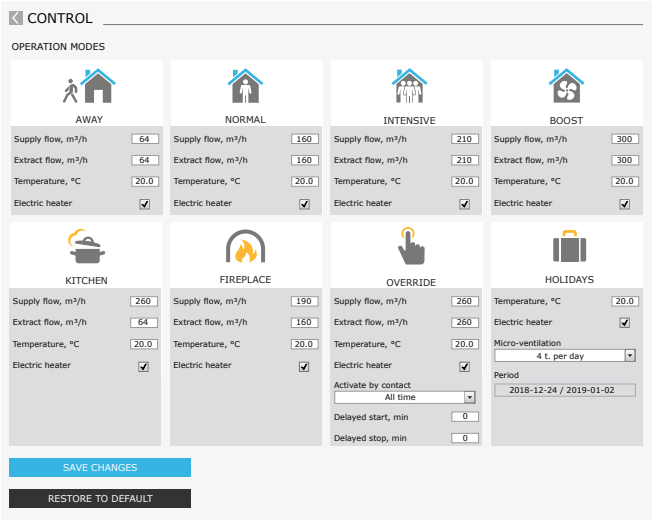

3.5.4. ECO and AUTO mode settings

You can change the settings of these modes by pressing the "Modify" button below the ECO and AUTO buttons. More information on these function see in Chapters 2.5 and 2.6. After changing the settings, press "Save changes" button at the bottom of the window. Press the return symbol at the top to return to the main window.

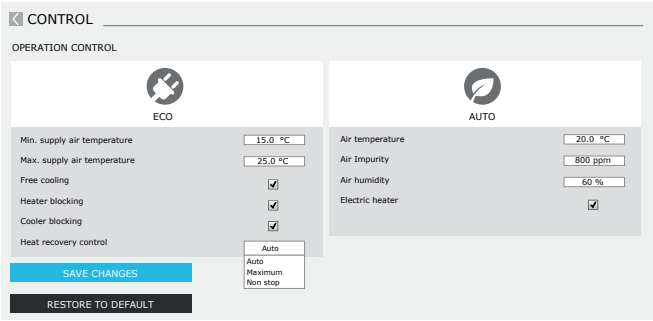

3.5.5. Ventilation by a weekly schedule

To activate ventilation by a weekly schedule, press AUTO[1] and select a desired operation schedule in the SCHEDULING section. Button of the selected schedule will change its colour.

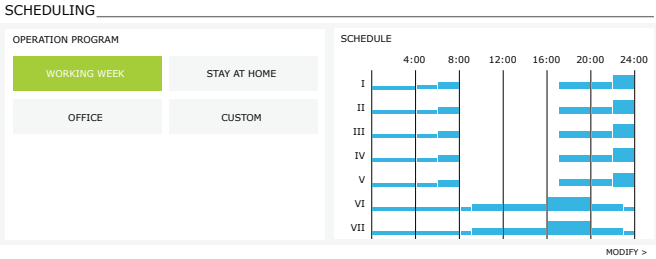

3.5.6. Creating a weekly schedule

You can modify a weekly schedule or create your own schedule by pressing the button "Modify" in the main window next to the section "Scheduling". In the window that opens, you can choose from pre-programmed weekly programs or may as well create a new one. You may program 4 different days in each operation schedule and 5 different events for every day. Each day should be assigned a day of the week for which the program is valid. Start and end times as well as operation mode to be activated must be specified for each event. Selecting a standby mode is not necessary, as the unit will be stopped during the intervals for which no ventilation mode is assigned. To add an additional day, press "Add new"; to add an additional event - press +. Press "Save changes" button. Press the return symbol at the top to return to the main window.

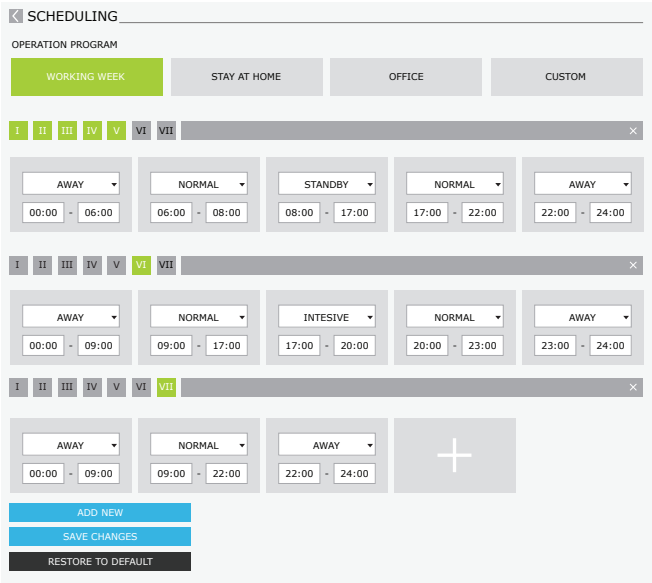

[1] Ventilation by a weekly schedule is not possible when air quality control function is activated.

UAB KOMFOVENT we reserve the right to make changes without prior notice

3.5.7. Alarms

In case of any fault messages during operation of the unit, a red exclamation mark will appear near the "Alarms" button. Device operation may be stopped given the severity of a fault message. Press the button ALARMS to read a message. You can also delete current messages or view a recorded history of faults (up to 50 recent messages). Press the return symbol at the top to return to the main window.

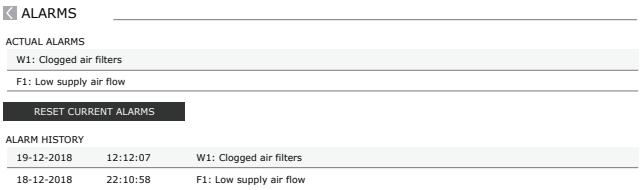

3.5.8. Settings

Most of the settings are performed in the SETTINGS window. You can access this window by pressing SETTINGS button at the top of the window.

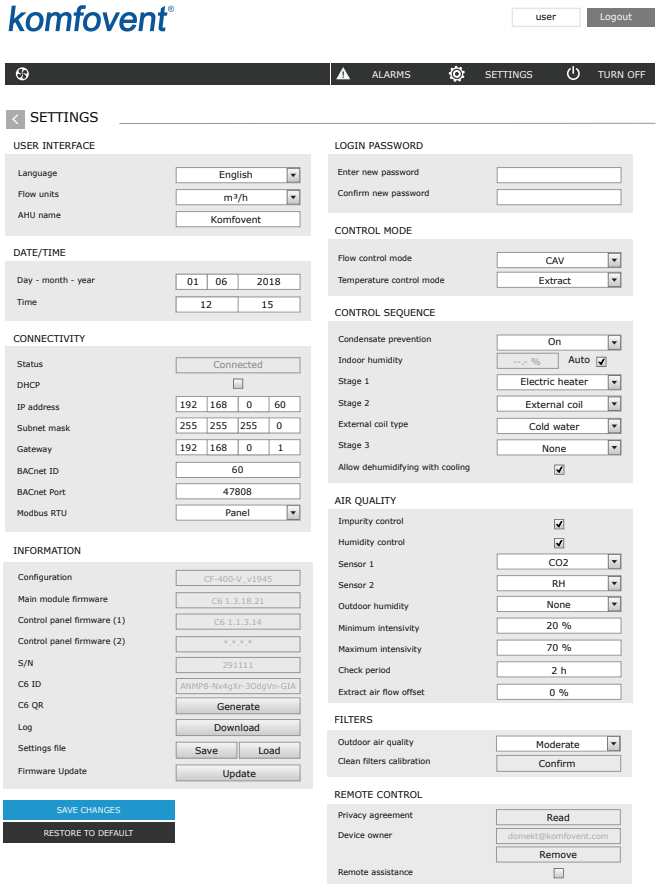

After changing any settings, press SAVE CHANGES to apply new values.
To discard changes, return to the start window by pressing the return button.
Button RESTORE SETTINGS restores all settings to the factory defaults. Be careful not to press this button accidentally.

The following sections are displayed in the settings window:
USER INTERFACE – you can use it to change the menu language, flow measurement units as well as enter the device name:

- Selected **language** will be applied to a web browser and a control panel.
- **Possible flow measurement units** – m^3/h or l/s. These units will be applied while operating in CAV or DCV flow control modes (see Chapter 2.1). Changing measurement units for VAV mode is not allowed; they are automatically changed to Pa.
- **Device name** is displayed at the top of the web browser window. If one computer is used to control several air handling units, we recommend naming every device differently (for example, by room, address, etc.).

DATE/TIME – setting the time and date that are used for weekly operations schedules or other functions.

CONNECTIVITY – allows configuring the network, Modbus and BACnet settings.

"Status" line shows connection between AHU and internet:

- **Disconnected** – AHU is not connected to LAN or internet network.
- **No internet access** – AHU is connected to LAN network and communicates with router, but internet is not accessible.
- **Connected** – AHU has internet access.

In the „Modbus RTU" line, it can be selected what device is connected to the terminals 20-21 of the C6M main board (See Domekt installation manual). Additional control panel for AHU, building BMS system or external fire damper controller can be used. If mentioned terminals on the board are not used, do not change this setting and leave it as "Panel".

INFORMATION – overview of the controller and control panel firmware versions.

- By pressing "Generate" button, QR code will be generated, that can be used when connecting via Komfovent Control mobile app.
- For detailed performance analysis, you may download a **device logbook** which contains weekly operation data. To open a logbook, you will need a "Log plotter" app that you can download from the "Komfovent" website. This data may also help in the event of a failure and may facilitate repair procedures, therefore, we recommend downloading an operation logbook and handing it over to the authorised service personnel.
- **User-made device settings** may be saved in a settings file (for example, saving a weekly schedule or desired air volumes and temperature). This allows easy transfer of settings to another unit of the same type.
- **Update firmware.** This button will only be visible when the ventilation unit is connected to the Internet and there is a newer firmware version than the one already stored in the controller. By pressing the button, the newer firmware will be automatically downloaded and installed into the ventilation unit. You will see the progress of the program update on the control panel screen. If newer version is not available, button will show "Up to date" text instead.

- **Stop the air handling unit before starting the firmware update.**
- **If the Internet connection is lost during the firmware update, the update will be stopped and will restart automatically when the connection is restored.**
- **Make sure that the power supply will not be interrupted during the update, otherwise, the update will fail and the controller's main board may be damaged.**

LOGIN PASSWORD – here you can change your password used for connecting to the unit via web browser. The default password is ***user***, but it may be changed to any other password, having at least 4 characters.

CONTROL MODE – allows changing the flow and temperature control modes (see Chapters 2.1 and 2.2).

- **Available air flow control modes**: CAV, VAV and DCV.
- **Flow corrections** can be done with CAV or DCV airflow control, in cases where the unit's measured air volume does not match the actual airflow. This may also be due to design features of the duct system, for example, wrong diameter ducts, excessive number branches or elbows, or installation without following the installation recommendations. When the VAV mode is selected, the measurement limit for pressure sensors connected to the main board must be additionally entered instead of the flow correction (see "Installation Manual"), i.e. maximum pressure Pa that the sensor is measuring by 10V output (measurement limits are specified in the VAV sensor manual).
- Select a **temperature control mode** from "Supply", "Extract", "Room" and "Balance" (see Chapter 2.2).

CONTROL SEQUENCE – here you can activate duct-mounted heating or cooling devices (see "Installation Manual") and configure anti-freeze protection of a plate heat exchanger.

- **Icing protection on CF units** has the following settings:
  On – automatic protection with an integrated pre-heater is activated by default.
  Off – protection may be switched off, but the unit will also be turned off when the outside air temperature drops below -4°C.
  External coil – when an external heater, connected to AUX terminals of the main board, is used instead an integrated pre-heater (see "Installation Manual").
- **Condensate prevention on R units** has the following settings:
  On – automatic condensate prevention is activated by default and will reduce ventilation intensity if needed (see "Advanced settings").
  Off – condensate prevention will not work and user-defined airflow will be maintained.
- **Indoor humidity** – this setting is required to determine freezing conditions. When "Auto" setting is selected, indoor humidity will be set automatically using an integrated humidity sensor and/or external humidity sensors connected to B8 and B9 terminals of the controller (see "Installation Manual"). If the control panel is installed in an inappropriate location (or is not used) and no outside humidity sensors are connected, uncheck the AUTO box and enter the indoor humidity in the range of 10...90 %.

Wrong value of indoor humidity may cause antifreeze protection to malfunction.

- **Numbers indicate** the order of activation. All units have an integrated electrical heater, therefore it is factory-assigned as Stage 1. You can also assign an "external coil" (duct-mounted water heater/cooler) or an "external DX device" (direct evaporation unit) as a stage. If an external coil is selected, you also must specify its type: "Hot water" (used for heating), "Cold water" (used for cooling). If additional heating/cooling devices are not available, you do not want to use them or an electric heater, select "None".

If you turn an electric heater off and do not use a duct-mounted heater, the desired air temperature may not be reached when the outside air is cold.

- **Allow dehumidification with cooling** – this setting must be enabled to use a DX unit or duct-mounted water cooler to dehumidify the supply air. An option to enter a value for desired humidity will appear in the settings of standard ventilation modes (see Chapter 2.6.2).

AIR QUALITY – here you can activate and set-up air quality control which will be used in AUTO mode (see Chapter 2.6.2):

- **Impurity control** – turning on/off an impurity control function. At least one CO2 or VOC sensor must be connected to the controller board to activate this function (see Chapter 2.6.2.). If ventilation by a weekly schedule is required, this function must be turned off.
- **Humidity control** – turning on/off a humidity control function. Humidity control function requires a humidity sensor. If no humidity sensor is connected to the controller board, sensor integrated in a control panel will be used for this purpose (see Chapter 2.6.2.).
- **Sensor 1** – specify the type of the sensor connected to a terminal B8 (see "Installation Manual"). If this sensor is not available, select "None".
- **Sensor 2** – specify the type of the sensor connected to a terminal B9 (see "Installation Manual"). If this sensor is not available, select "None".
- **Outside humidity** – this option appears only if one of the sensors is of RH type (humidity sensor). If any of the connected sensors are installed in the outdoor air flow, specify which one. If none of the installed humidity sensors measure the outside humidity, select "None".
- **Minimum intensity** – select ventilation intensity at which the unit will operate when air quality (impurity or humidity) is good. If 0% is selected, the unit will stop when air impurity level is low.
- **Maximum intensity** – select ventilation intensity limit, under which the unit will operate when air quality (impurity or humidity) exceeds a defined value.
- **Check period** – specify how often the unit shall turn on to check air quality, when minimum intensity is set to 0%.
- **Extract air flow offset** – If you want the supply and extract air flow disbalance during air quality function operation, enter the percentage by which the extract air fan speed should differ in proportion to the supply air.

FILTERS. Here you can set outdoor air quality parameters or perform new filter calibration:

- **Outdoor air quality.** The time it takes for air filters to get dirty depends a lot on the environment in which the building is located. If the ambient air is very polluted, the filters will get dirty much faster and will need to be replaced more often. If the air quality of the environment is good, the filters will last longer. Since the air handling unit does not measure outdoor air quality, it can be specified in this menu, thus filter contamination messages will be more accurate.
- **Clean filters calibration** – after replacement, you must reset a filter timer by clicking this button.

FILTERS

Outdoor air quality	Moderate
Clean filters calibration	Confirm

REMOTE CONTROL – settings for remote access to the air-handling unit

REMOTE CONTROL

Privacy agreement	Read
Device owner	domekt@komfovent.com
	Remove
Remote assistance	☐

- **Privacy agreement** – after pressing the button, you will see a QR code, that can be scanned with a smartphone. After reading the privacy policy it can be accepted or declined.

If you do not accept or decline the privacy policy, you cannot control the device with your smartphone or receive remote assistance from an authorized service representative.

- **Device owner.** If the unit has been added to an account by an unknown person (e.g. an installer or a previous occupant of the same dwelling with a ventilation unit), their account can be removed from the unit by pressing the "Remove" button.
- **Remote assistance** – by activating this feature, you can provide remote access to maintenance personnel or service representatives, e.g. in case of unit breakdown. Read more about this option in the "Troubleshooting" section.

4. TROUBLESHOOTING

Device automation continuously monitors the operation of various components and function algorithms. If something goes wrong, the device informs you with a message and an audible alarm from a control panel (alarm may be disabled). Messages are divided into critical alarms and notifications. Critical alarms occur when the device cannot continue operation without intervention of the user or an authorised service representative. Notifications are used to warn the user about possible faults or small discrepancies but they do not stop the device.

In case of a message, perform the following actions:

- Read the message and note its number displayed on screen (control panel, computer, smartphone).
- Stop the unit. If heating/cooling devices were running at that time, pressing the OFF button will keep the unit running for a few minutes until heater/cooler temperature is stabilized.
- Once the unit stops, unplug it from the mains.
- Find tips in the "Message Table" by the message number (see Chapter 4.1).
- If possible, eliminate the cause. If a fault cannot be resolved, contact an authorized service representative.
- After troubleshooting, make sure no foreign objects, debris or tools are left inside the unit, and only then close the unit door.
- Connect the unit to the mains and delete all alarms from the message window.
- If a fault is not resolved, depending on its nature, the device may not start or may start and display an alarm after a while.

- **Before performing any work inside the unit, make sure that the device is stopped and unplugged.**
- **After stopping the unit, wait a few minutes for the fans to stop rotating and the heating devices to cool down before opening the door.**

4.1. Table of messages

Below is a list of messages and recommended actions to resolve faults. These messages are displayed in the C6.1 control panel, mobile app or a computer. F stands for critical alarms, W – for notifications.

Code	Message	Possible cause	User's actions
F1	Low supply air flow	1. Contaminated air filters. 2. Excessive resistance of ducts. 3. VAV air flow control selected but pressure sensors are not connected. 4. Supply air fan not working.	1. Check air filters and replace, if needed. 2. Check air dampers, air inlet/exhaust openings. 3. If VAV air flow control is required (see Chapter 2.1), install and connect duct-mounted pressure sensors. If VAV mode not necessary – select CAV or DCV in the settings. 4. Contact authorised service.
F2	Low extract air flow	1. Contaminated air filters. 2. Excessive resistance of ducts. 3. VAV air flow control selected but pressure sensors are not connected. 4. Extract air fan not working.	1. Check air filters and replace, if needed. 2. Check air dampers, air inlet/exhaust openings. 3. If VAV air flow control is required (see Chapter 2.1), install and connect duct-mounted pressure sensors. If VAV mode not necessary – select CAV or DCV in the settings. 4. Contact authorised service.
F3	Return water temperature low	1. No hot water in the water heater system. 2. Circulation pump not working. 3. Water control valve or actuator not working. 4. Return water temperature sensor is faulty or installed incorrectly.	1. Check if hot water is in the system. 2. Check if a circulation pump is working. 3. Check if a water control valve is opening. 4. Check whether a return water sensor is installed according to the directions specified in "Installation Manual". Contact your installer or authorized service.
F4	Low supply air temperature	1. Integrated heaters not working. 2. Additional heating/cooling devices faulty or installed incorrectly. 3. Faulty air temperature sensor.	1. Contact authorised service. 2. Contact the company that installed or sold additional heating/cooling equipment. 3. Contact authorised service.
F5	High supply air temperature	1. Integrated heaters malfunctioning. 2. Additional heating/cooling devices malfunctioning or installed incorrectly. 3. Faulty air temperature sensor.	1. Contact authorised service. 2. Contact the company that installed or sold additional heating/cooling equipment. 3. Contact authorised service.

UAB KOMFOVENT we reserve the right to make changes without prior notice

Code	Message	Possible cause	User's actions
F6	Electric heater overheat	1. Supply air flow too low at high heating demand. 2. Power failure during operation of the electric heater; the heater could not cool down. 3. Electric heater malfunctioning.	1. a. Check air filters and air ducts. 1. b. Decrease the desired temperature. 1. c. Increase ventilation intensity. 2. Check whether the unit is connected to the mains. 3. Contact authorised service. Once the fault is eliminated, reset an overheating protection thermostat before restarting the unit. Look for a yellow sticker with the word "Reset" inside the unit that marks an overheating protection fuse. Depending on the model, the button may have a black round cap or it may be integrated inside the heater housing and accessible with a long pointed object (e.g., pencil) through a specially designed opening.
F7	Heat exchanger failure	1. Rotor heat exchanger not rotating (only for DOMEKT R devices). 2. Air bypass damper of the counter-flow heat exchanger malfunctioning (only for DOMEKT CF units).	1. Check for foreign objects or debris preventing rotation of the rotor drum. Check if the rotor belt is not torn. 2. Contact authorised service.
F8	Heat exchanger icing	1. Antifreeze protection of the heat exchanger is malfunctioning. 2. Antifreeze protection is switched off and outside air temperature is below -4 °C.[1]	1. Check the antifreeze protection settings. Check if an external pre-heater is working, if used. 2. Check antifreeze protection settings. If an integrated or external pre-heater is not used, you will not be able to use a device with a counter-flow heat exchanger when the outside temperature drops below -4 °C.
F9	Internal fire alarm	1. Internal air temperature is above 50°C 2. Faulty temperature sensor.	1. Locate the heat source in the ductwork or unit. 2. Contact authorised service.
F10	External fire alarm	A fire alarm was received from the building fire system.	Once fire alarm is removed, the unit must be started using a control panel, computer or a smartphone.
F11-F22	Temperature sensor failure	Temperature sensor(s) faulty or not connected.	Contact authorised service.
F23-F27	Controller failure	Controller main board malfunction.	Contact authorised service.
F28	Temperature sensor failure	No signal from temperature sensor located in the control panel.	Check control panel wiring and cables. Replace the control panel, if necessary.
F29	Humidity sensor failure	No signal from humidity sensor located in the control panel.	Check control panel wiring and cables. Replace the control panel, if necessary.
F30	Humidity sensor failure	Faulty or disconnected air humidity sensor by which the unit is operating.	Check the sensor wiring, replace the sensor or indicate that this sensor is not used in the settings.
F31	Impurity sensor failure	Faulty or disconnected impurity sensor by which the unit is operating.	Check the sensor wiring, replace the sensor or indicate that this sensor is not used in the settings.
F32–F37	Heat exchanger failure	Rotor heat exchanger not rotating (only for DOMEKT R devices).	1a. Check for foreign objects or debris preventing rotation of the rotor drum. Check if the rotor belt is not torn. 1b. Contact authorised service.
F38–39	Air flow sensor failure	Disconnected or faulty air flow sensor(s)	It is necessary to check the sensor connections or to change the sensor.
F40	Communication error	1. Wrong settings 2. Not connected or broken external fire damper controller.	1. If fire damper system controller is not used with AHU, disable it in the Settings->Connectivity->Modbus RTU 2. Contact person responsible for fire damper system maintenance or authorized service.
F42-F45	Fire damper failure	Incorrect operation of one or more fire damper actuators	Contact person responsible for fire damper system maintenance or authorized service.
F46-F50	External fire alarm	External fire alarm received from fire damper controller.	Fire alarm can be generated from building fire system, from smoke detectors, thermostats of the damper actuator or etc.
F51-F52	Electric heater overheat	1. Integrated heaters malfunctioning. 2. Faulty air temperature sensor.	Contact authorised service.
F53 - F55	Supply fan drive failure	Supply air fan not working.	Contact authorised service.
F56	Communication error	There is no connection with the supply air fan.	1a. Check the fan connection. 1b. Contact authorised service.
F59 - F61	Exhaust fan drive failure	Extract air fan not working.	Contact authorised service.
F62	Communication error	There is no connection with the extract air fan.	1a. Check the fan connection. 1b. Contact authorised service.
W1	Clogged air flters	Replacement of air filters is necessary.	Switch off the device and replace air filters. Delete the message after replacement.
W2	Service mode	Temporary special operating mode that can only be activated by a service specialist.	If the unit has been recently repaired, contact the person who repaired the unit to determine if service mode can be disabled. Service mode is turned off by deleting the message.

[1] Only in CF units.

Code	Message	Possible cause	User's actions
W3	Return water temperature low	Warning that the water temperature is lower than that required to heat the supply air.	Check the condition of a circulation pump and the heating system as well as operation of a heating damper actuator.
W4	Humidity sensor failure	One of the two humidity sensors is faulty or not connected. Device is operating by another connected sensor.	Check the control panel wiring, replace the sensor or select that this sensor is not used in the settings.
W5	Impurity sensor failure	One of the two air quality sensors is faulty or not connected. Device is operating by another connected sensor.	Check the control panel wiring, replace the sensor or select that this sensor is not used in the settings.
W6	Low heat exchanger efficiency	1. Message may appear when air is extracted through an additional branch, and, as a result, the heat exchanger efficiency has decreased (only for DOMEKT R devices). 2. Supply air volume significantly exceeds the extract air volume. 3. The unit door is not fully closed and different air flows are mixed.	1. If additional extraction is not used, the fifth branch must be closed. Check if an air closing damper installed in the auxiliary extraction duct is completely closed. 2. If such air flow difference is not required, unify air flow settings. 3. Check that the unit door is pressed firmly and that gaskets are not worn.
W7	Temperature sensor failure	Extract air temperature sensor (SHI) not connected or defective.	Contact authorised service.
W8	Fan pressure sensor failure	The supply air fan is malfunctioning.	Contact authorised service.
W9	Fan pressure sensor failure	The extract air fan is malfunctioning.	Contact authorised service.
W10	Electric heater off	Electric heater is blocked due to incorrect operation of supply fan	Contact authorised service.

4.2. Table of light indicators of the C6.2 control panel

Since the C6.2 control panel does not have a display, it notifies about operation or malfunctions by means of indicator LEDs. Layout and description of indication LEDs is presented in Chapter 3.2. Different blinking and colour indicates different messages.

Indication	Operation	Possible cause	User's actions
Indicator near ON/OFF button lights up in red.	Device not working	Device stopped.	Press ON/OFF button to turn on/off the device.
Blue indicator near one of ventilation mode buttons is blinking	Device not working	The unit will soon start in a ventilation mode the indicator of which is blinking.	No actions required.
Blue indicator light next to AUTO button lights up	Device not working	The device is stopped according to a weekly schedule or because of the air quality function.	If you want the unit to operate continuously, not by a schedule or air quality, press AUTO button.
Blue indicator near one of ventilation mode buttons lights up	Device is working	The unit operates in a ventilation mode the indicator of which is on.	No actions required.
Red indicator for messages and blue indicator for ventilation mode light up.	Device is working	Contaminated air filters or other notifications are present.	To read the exact notification, connect a computer or a smartphone to the unit. Follow the table of messages in Chapter 4.1.
Red indicator for messages and blue indicator for ventilation mode are blinking.	Device is working	Temporary special operating mode that can only be activated by a service specialist.	If the unit has been recently repaired, contact the person who repaired the unit to determine if service mode can be disabled. Service mode is turned off by deleting a message.
Red message indicator is blinking	Device not working	Critical fault messages are present that prevent the unit form working.	To read the exact critical fault message, connect a computer or a smartphone to the unit. Follow the table of messages in Chapter 4.1.
All panel indicators are blinking	Not important	Cable between the device and the panel is damaged or connected incorrectly.	Check the control panel wiring following the "Installation Manual" or contact your installer or authorised service representative.
Keypad buttons are inactive	Not important	1. Panel lock activated (see Chapter 3.2.4). 2. Faulty panel.	1. To unlock the control panel, press ON/OFF button and the reset button at the same time and hold for 5 seconds. 2. Contact authorised service.

4.3. Remote control

If the ventilation unit is connected to the Internet, remote access to it can be provided to service representatives or a maintenance company if necessary. In the "Settings" menu, in the "Remote control" window, you will find the "Remote assistance" function.

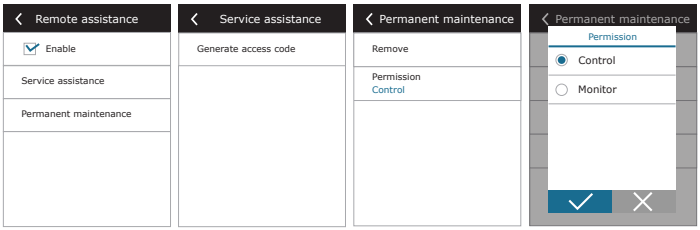

As well, settings of the "Remote assistance" function can be found in the web interface if computer is connected directly to the air handling unit.

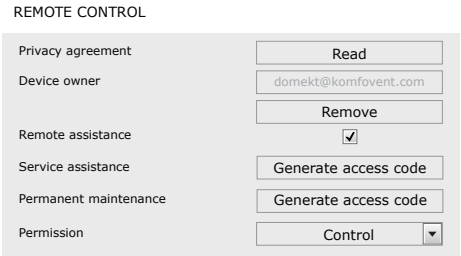

Remote access can be granted temporarily, for example only during the repair of the device or for permanent monitoring to the maintenance personnel.

Before activating the "Remote Assistance" function, contact the company maintaining the device or an authorized service representative. You will need to provide them with a generated access code, which will be used for the connection.

5. PERIODICAL MAINTENANCE

For proper operation of the air handling unit, it should be periodically inspected, the air filters replaced in due time and the interior of the unit cleaned. Some of the maintenance works can be performed by the user and others only by a qualified specialist.

The operation, maintenance or repair of the air handling unit is prohibited for people (including children) with mental, physical or sensory disabilities, as well as for persons without sufficient experience and knowledge, unless supervised and instructed by the person responsible for their safety in accordance with these instructions.

- **Before performing any work inside the unit, make sure that the device is stopped and unplugged.**
- **After stopping the unit, wait a few minutes for the fans to stop rotating and heating devices to cool down before opening the door.**
- **Open the door of flat ceiling mounted devices carefully, do not let them swing freely on the hinges. Also, be careful, as the filters may fall out when the door is opened.**
- **The doors on some unit models do not have hinges, so do not let the door out of your hands after unlocking it, as it may fall and cause injury.**

The following table provides recommended regular maintenance intervals for the unit. Actual frequency of maintenance works depends on operating conditions, amount of dust and impurities in the ventilated air as well as environment in which the unit is installed. Locations of all the mentioned device components and notes indicated in the "Installation Manual".

Task	Frequency	Performed by
Check filters; change, if necessary	3 months	User
Change filters	6 months	User
Clean dust inside the unit	6 months	User
Check the rotor belt for wear and tension (only for DOMEKT R devices)	12 months	User
Replacement of a worn rotor belt	If necessary	Service representative
Check the rotor wheel brushes for tightness and wear (only for DOMEKT R devices)	12 months	Service representative
Replace worn rotor wheel brushes	If necessary	Service representative
Check the rotor wheel for contamination with dust/other materials (only for DOMEKT R devices)	6 months	User
Clean the rotor wheel	If necessary	Service representative
Check the plate heat exchanger for contamination with dust/other materials (only for DOMEKT CF devices)	6 months	User
Clean the plate heat exchanger	If necessary	Service representative
Check if the rotor wheel rotates freely and at the required speed (only for DOMEKT R devices)	12 months	Service representative
Check operation of an air bypass damper of the plate heat exchanger (only for DOMEKT CF units)	12 months	Service representative
Check if dampers open/close fully (if available)	6 months	User
Rotate fans by hand to check for any obstructions, extraneous noise and vibrations	12 months	User
Check fan operation and clean impellers	12 months	Service representative
Check operation of heating/cooling devices	12 months	Service representative
Check automation and safety devices	12 months	Service representative
Check tightness of the doors and state of gaskets	12 months	Service representative
Clean piping and siphon of the condensate drainage (only for DOMEKT CF units)	12 months	User

The inside of the air handling unit can be cleaned with a vacuum cleaner and/or a damp cloth. When cleaning, prevent water from entering electrical components of the unit. Make sure all surfaces are completely dry before starting the unit.

5.1. Filter inspection and replacement

Check if filters are not damaged, torn or dampened. Filter replacement time depends on environmental contamination, season of the year, for example, during spring and summer filters may be contaminated with pollen, fluff or insects, therefore change intervals are shorter. Replace filters if they are visibly dirty even though it is not time yet. When replacing filters earlier, be sure to perform a clean filter calibration as described in Chapter 3. When filters are replaced upon a filter replacement message, calibration is not required. Contaminated filters increase pressure loss of the unit, reduce purification efficiency and increase power consumption.

When placing the filter in the ventilation unit, take into account the direction of the air flow, otherwise the filter will not work effectively. The direction of air flow is indicated by the arrow on the sticker on the filter frame.

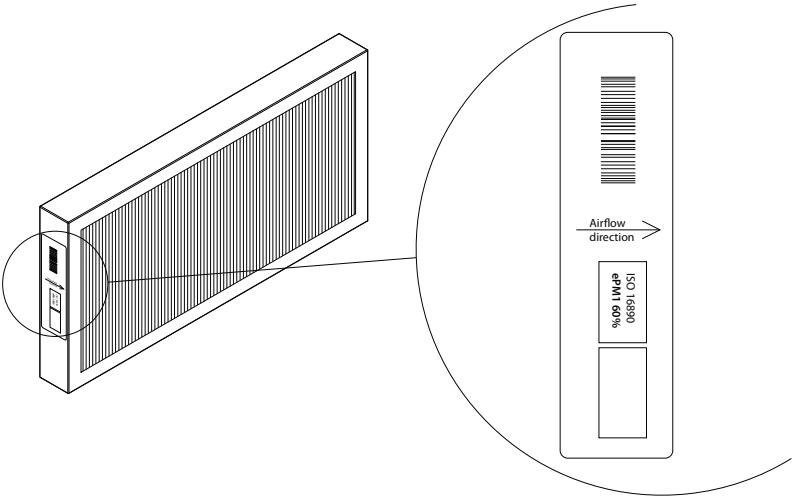

Figure 1. A filter sticker indicating the direction of air flow

In a ventilation unit, air always moves towards the center of the unit, so place the filters so that their arrow points towards the heat exchanger.

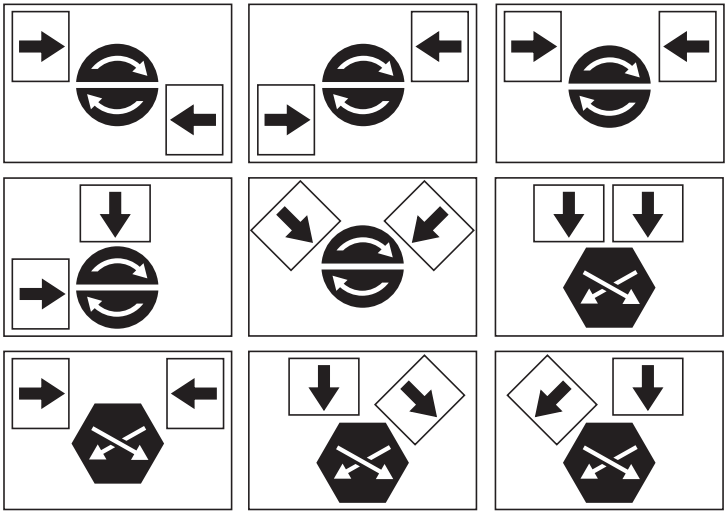

Figure 2. Examples of filter direction on different types of devices

The pictures below show the location of filters on different models of devices. Because the devices are manufactured with the right and left access sides, and the images show only one access side, your device may look different from the one shown. Layout of filters and components presented in the "Installation Manual".

Domekt R 400 V - R 450 V

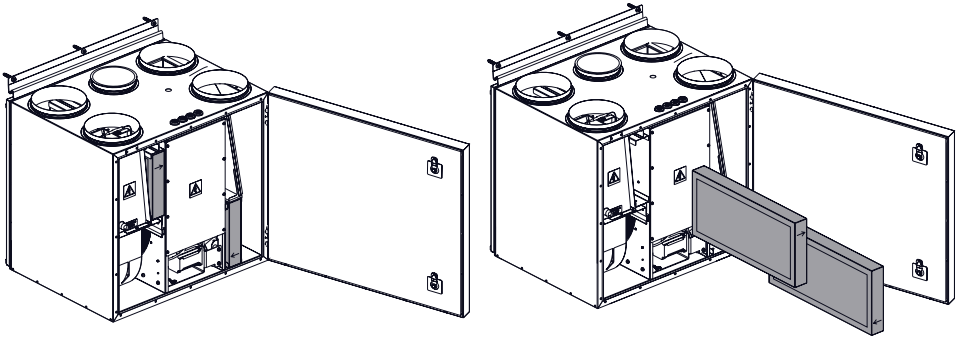

Domekt R 400 H

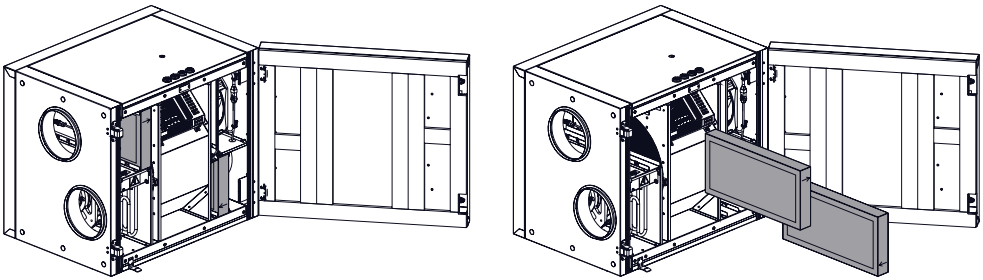

Domekt R 400 F

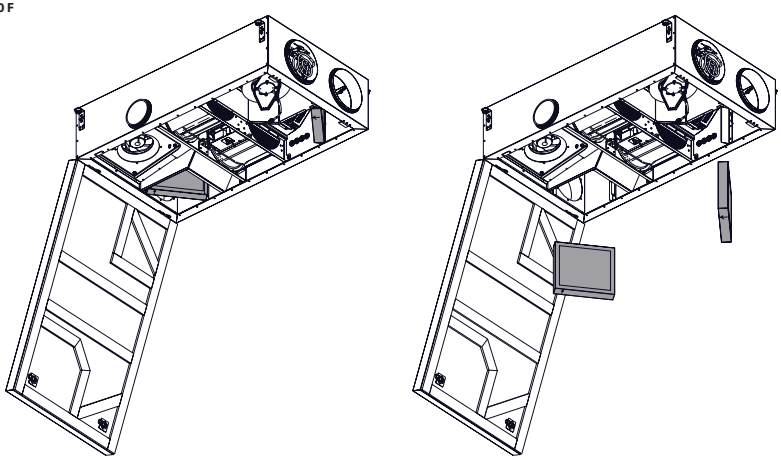

Domekt R 600 V

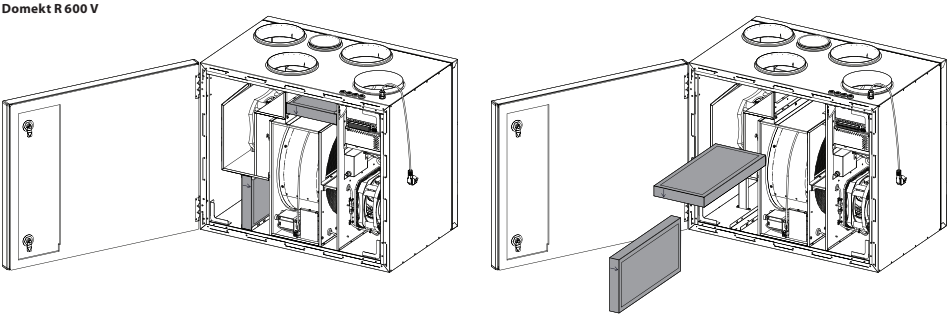

Domekt R 600 H

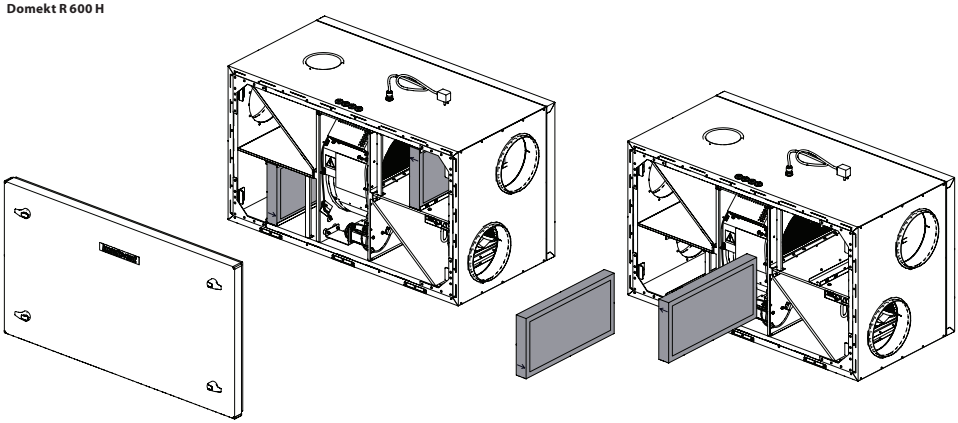

Domekt R 700 H

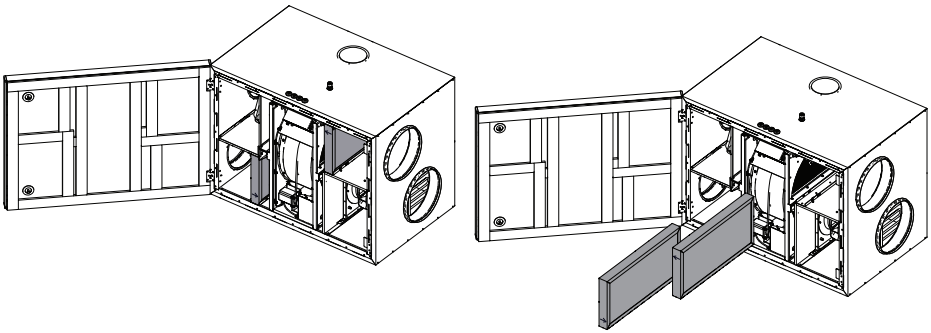

Domekt R 700 V - R 900 V

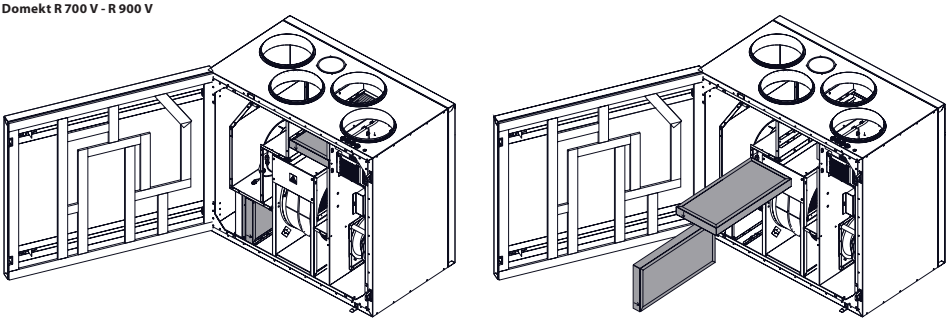

Domekt R 700 F

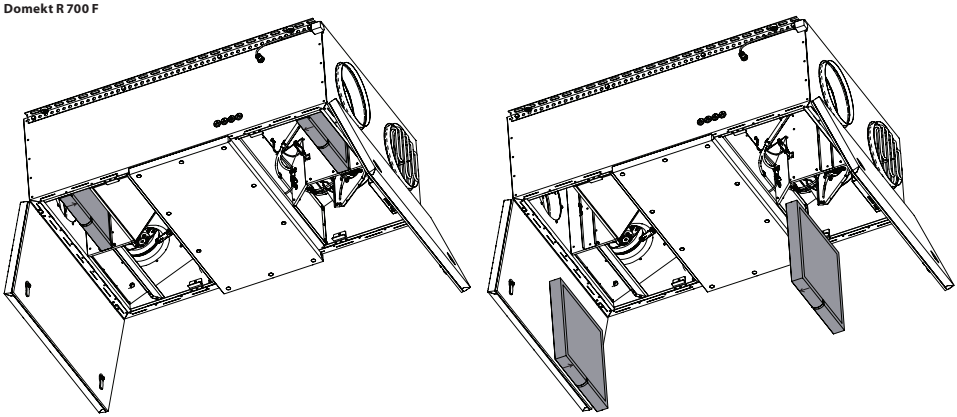

Domekt CF 150 F

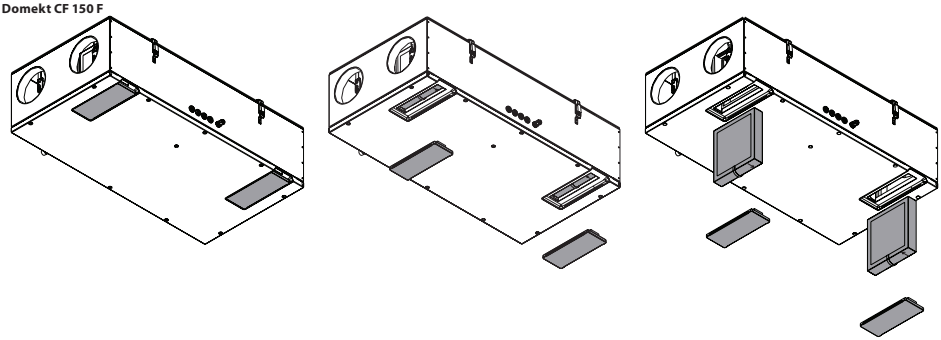

UAB KOMFOVENT we reserve the right to make changes without prior notice

Domekt CF 200 V - CF 300 V

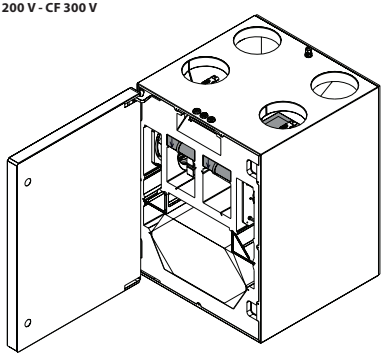

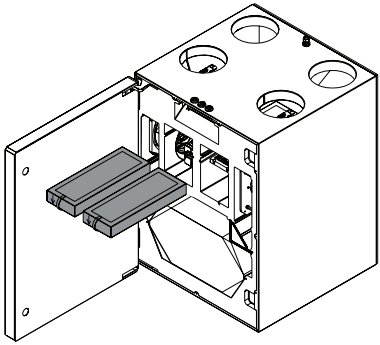

Domekt CF 350 V E1

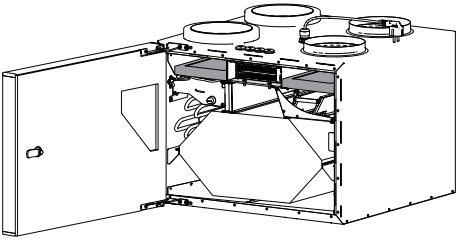

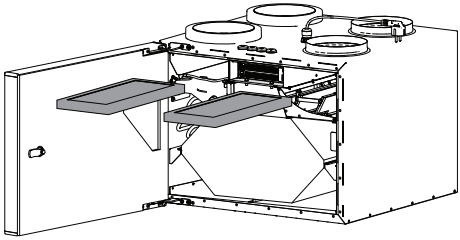

Domekt CF 400 V

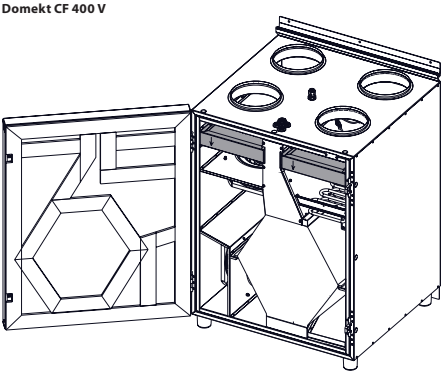

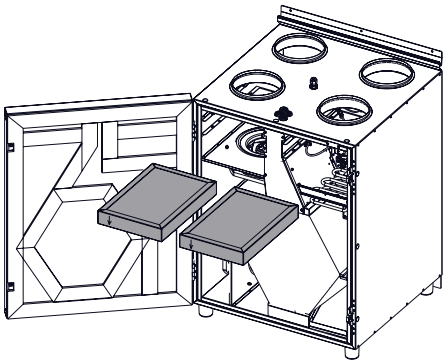

Domekt CF 500 F

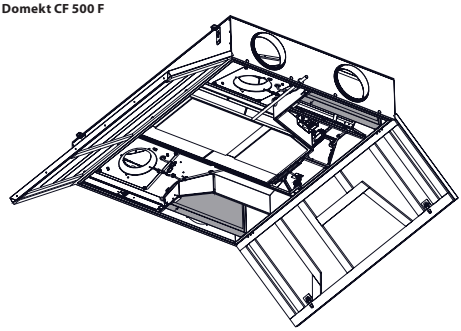

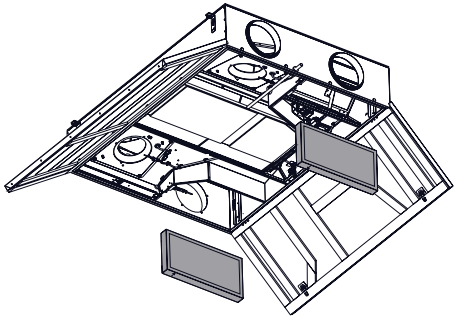

Domekt CF 700 H

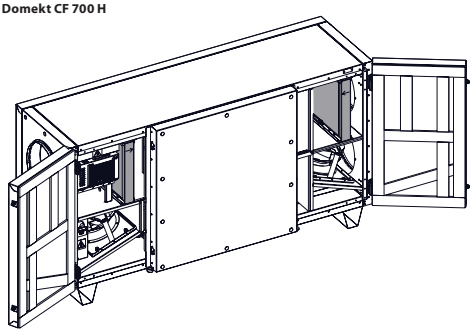

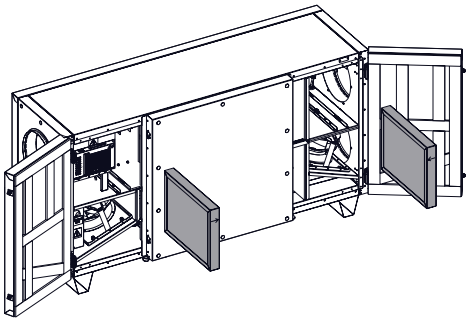

Domekt CF 700 F

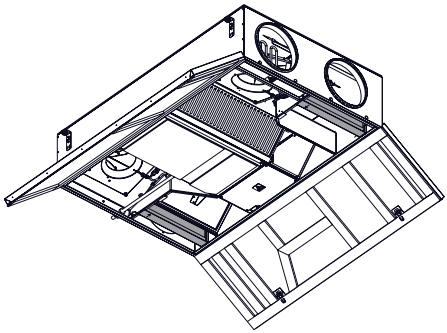

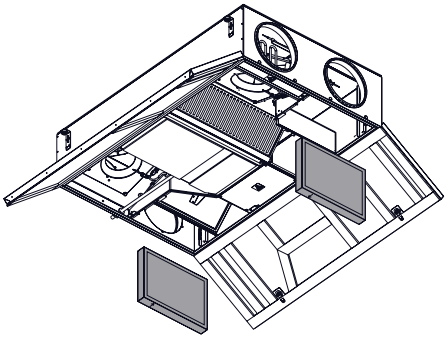

Domekt CF 700 V

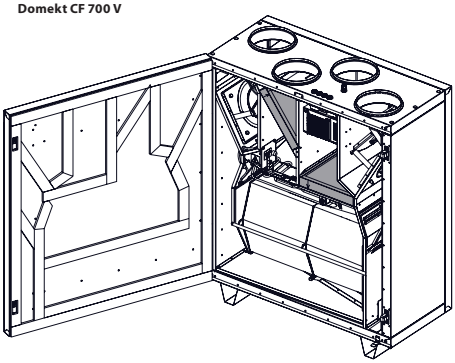

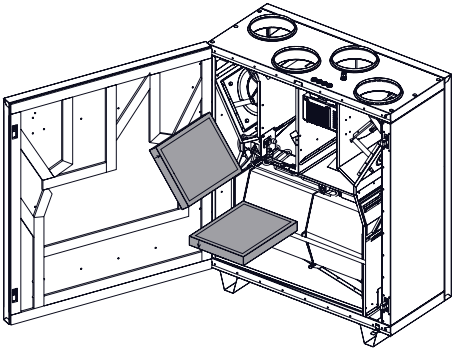

5.2. Device maintenance journal

The following table is for recording performed maintenance and repair works. The log is mandatory if the air handling unit is covered by the extended manufacturer's warranty.

Date	Performed procedures/notes	Procedures performed by: Name, last name, signature

UAB KOMFOVENT we reserve the right to make changes without prior notice

APENDIX NO.1

KOMFOVENT CONTROL TERMS OF USE AND PRIVACY NOTICE

1. Introduction

These Terms of Use ("the Terms") govern the use of the KOMFOVENT CONTROL mobile application, operated by KOMFOVENT, UAB ("KOMFOVENT"), and the use of other related services. KOMFOVENT CONTROL is a mobile application designed to CONTROLly monitor and control a KOMFOVENT air handling unit connected to the Internet. These Terms also contain information about personal data processed for the above-mentioned purposes.

You must confirm that you have read the Terms of Use to use the KOMFOVENT CONTROL application. Please read all the Terms carefully and start using the KOMFOVENT CONTROL application only if the terms are clear and acceptable. KOMFOVENT reserves the right, at its sole discretion, to change these Terms of Use. If you continue to use KOMFOVENT CONTROL after we post changes to the Terms of Use, you are signifying your acceptance of the new terms.

2. Functionality

KOMFOVENT CONTROL allows monitoring and controlling your KOMFOVENT air handling unit remotely. As a user, you can see existing errors or warning messages, select and adjust the AHU settings and main parameters that provide information about the operation of the unit and facilitates its control.

The user can turn the device on/off, change modes and settings (airflow, temperatures, etc., depending on the device configuration), set a weekly schedule or air quality control function. User can monitor: sensor readings (temperature, humidity, etc., depending on installed sensors), flow/fan intensity information, heat exchanger operation and efficiency, filter contamination, power consumption, messages, message history, etc. KOMFOVENT may also perform software updates remotely (regarding bug fixes, compatibility of the application/controllers/server, support of new functions, etc.).

Detailed information on the KOMFOVENT CONTROL functions and operation can be found in the DOMEKT User Manual available at www.komfovent.com.

In case of any discrepancies between the product information provided in the Terms of Use and the User Manual, the information specified in the User Manual shall prevail.

3. Your Responsibility

Device ID number (ID) and a password identify you as a user in the KOMFOVENT CONTROL application. We strongly recommend that you make use of a unique and strong password that is reasonably hard to guess or find out (for example, do not use your name, birth date, car make or the same password used in other accounts) and do not disclose it to others. If you suspect someone is using your password, change it immediately.

The use of the KOMFOVENT CONTROL application is free except for any possible data usage fees that may be set by your Internet service provider.

4. Rights

Copyrights, other rights and contents of KOMFOVENT CONTROL are owned by KOMFOVENT and protected by law.

Commercial use of these rights without a prior written consent of KOMFOVENT is prohibited. This also applies to copying, transferring and sale of information, images, graphics, program codes and technical solutions. Bypassing security measures or system is prohibited.

Unauthorized use or distribution of the KOMFOVENT CONTROL application may violate copyrights, trademark and/or other laws and may be subject to civil and criminal liability.

5. Privacy Notice

5.1. Installation

In order to install the KOMFOVENT CONTROL application, you must agree with the Terms of Use and connect your controller to the Internet. Once the controller is connected to the Internet, the following data is periodically sent to the KOMFOVENT server:

- Product/controller ID number (ID).
- Software versions.
- Device configuration name.
- Product serial number.
- IP address and port number of the controller.
- Date of the first attempted login.

The processing of this data is necessary for the operation of the KOMFOVENT CONTROL app and provision of remote control services. If you use the KOMFOVENT CONTROL application, the legal basis for the processing of such data is the execution of the agreement on the use of the KOMFOVENT CONTROL mobile application.

The above-mentioned data is periodically sent to the KOMFOVENT server even if you do not start using your KOMFOVENT CONTROL application or decide to stop using KOMFOVENT CONTROL after connecting your device to the Internet. In this case, the legal basis for the processing of such data is your consent expressed by connecting your controller to the Internet. To stop sending the above-mentioned data, disconnect your controller from the Internet.

5.2. Login

To start controlling and monitoring your device via the KOMFOVENT CONTROL application, simply enter your device ID/scan the QR code and enter your password in the application. The controller and mobile phone must have access to the Internet.

5.3. Data Categories and Objectives

The following is an overview of data and personal information processed by KOMFOVENT:

Account credentials:
- User password.

Information about the product and its use:
- Date of the controller's first attempt to connect to the server.
- Product/controller ID number (ID).
- Product serial number.
- Software versions.
- Device configuration name.
- Data and parameters for control and operation of the product/device:
  - Operation modes and settings: flow, temperature, humidity and air quality settings, disabling or enabling of individual units.
  - Values for different types of device sensors, for example, temperature sensors, humidity sensors, etc.
  - Calibration values, operation limits.
  - Informative parameters: fan control levels, efficiency, energy consumption meters, notifications.
  - Parameters affecting device performance.
  - Weekly schedule times, programs, modes.
  - Settings of time, measurement units.

KOMFOVENT processes personal data for the following purposes:
- To provide a remote control feature to the user;
- To provide remote assistance;
- To analyse product operation;
- To improve the product and the KOMFOVENT CONTROL operation;
- To handle complaints and warranty requests.

The legal basis for the processing of such data is the execution of the agreement on the use of the KOMFOVENT CONTROL mobile application.

5.4. Storage and Deletion

Data specified in point 5.1 Installation is periodically sent to the KOMFOVENT server. The server does not connect to the controller and does not store any more data until the KOMFOVENT CONTROL application is downloaded and the Terms of Use are accepted. Once the Terms of Use are accepted, the server starts periodically collecting the data specified in point 5.3 Data Categories and Objectives.

Device data history is stored for 1 month.

After that, the data is safely and carefully deleted unless it is anonymized or there are other reasons and legal basis for extended storage.

5.5. Transfer of Personal Data

Personal data processed by KOMFOVENT shall not be transferred to third parties for management purposes. Personal data may only be transferred to data processors providing installation, maintenance and other services to KOMFOVENT. These companies process data on our behalf and under signed data processor contracts.

Your data will not be transferred to others unless you have given your consent or KOMFOVENT has a legal obligation to transfer such data or the transferred data is anonymized.

5.6. Additional Information

You have the right to access your personal data, to have it corrected or deleted, to restrict the processing and portability of your data, to refuse the processing of your personal data and the right to complain to the State Data Protection Inspectorate. Requests for enforcement of your rights shall be sent to the specified e-mail address or to the KOMFOVENT, UAB office address.

6. Notification and Termination

You may stop using the KOMFOVENT CONTROL app and/or stop periodical collection of your device information specified in point 5.3 Data Categories and Objectives at any time. This can be done in the KOMFOVENT CONTROL application by refusing to accept the Privacy Policy. By refusing to accept the Privacy Policy, you lose access to the KOMFOVENT CONTROL application and your device data is deleted from the KOMFOVENT server unless it is anonymized or there are other reasons and legal basis for extended storage.

If you transfer ownership of the product, you shall inform the new owner of the Terms of Use of KOMFOVENT CONTROL.

KOMFOVENT may terminate your access to the KOMFOVENT CONTROL application by notifying you 90 days in advance about the termination of the KOMFOVENT CONTROL services or planned major changes to the program. KOMFOVENT may also terminate or limit your access to the KOMFOVENT CONTROL if you violate these Terms of Use.

7. Disclaimer

Internet access is required for the proper functioning and failure-free operation of the KOMFOVENT CONTROL application according to these Terms and Product User Guide. In rare cases, KOMFOVENT CONTROL or a part thereof may be unavailable due to, for example, program updates, Internet network problems or other malfunctions.

KOMFOVENT will make every effort to ensure that the KOMFOVENT CONTROL app is free from viruses and other threats, but cannot guarantee this. You shall be held responsible for using and maintaining antivirus software and other security features on your phone and for backing up your data.

If you receive an error message or notice the error yourself, please report it to KOMFOVENT. KOMFOVENT shall not be held liable for any direct or indirect loss incurred by you or others if the KOMFOVENT CONTROL app cannot continue to operate as expected.

8. Contact information and other

The remote service provider and data controller is KOMFOVENT, UAB, company code 124130658, registered address Lentvario g. 146, 25132 Vilnius,

e-mail: info@komfovent.com.

For more information about KOMFOVENT products and services visit www.komfovent.com.

APENDIX NO.2

WARRANTY INFORMATION

Dear Customer,

KOMFOVENT thanks you for your choice. We are pleased that you have chosen us and will strive to ensure you are satisfied with your purchased product. To avoid misunderstandings, we kindly ask you to read the installation and operating instructions of the product carefully.

KOMFOVENT hereby confirms the obligations set by applicable consumer rights protection laws to fulfil consumer claims in case of detected product defects.

In case of any problems, we recommend immediately contacting the company that installed your ventilation unit, the company providing technical maintenance, or the nearest KOMFOVENT distributor branch. Please always note the device serial number. The device's serial number can be found on a sticker attached to the outside of the unit or on a plate mounted on the unit frame. Your claim will be registered and, if repair of the device is required, a representative will agree with you on a convenient arrival time. All repairs covered by the warranty will be carried out free of charge – with no charges for spare parts or labour.

Only an authorized representative can decide whether defective parts should be repaired or replaced with new ones. Replaced or repaired parts remain covered by the overall unit warranty. If repairs are performed after the end of the device's warranty period, the replaced or repaired parts are covered by a 6-month warranty.

The warranty covers all defects in the device arising from manufacturing or assembly faults. When operating the device under the conditions listed below, this warranty is valid from the product purchase date. If the purchase date is unknown, the warranty is calculated from the manufacturing date.

NORMAL OPERATING CONDITIONS

1. The devices must be protected from direct water ingress (rain or snow) and the effects of chemicals or be of special configuration intended for outdoor and/or aggressive environments.

2. The ambient temperature must be from -30 °C to +40 °C (if the unit wall thickness is at least 45 mm) or from 0 °C to +30 °C (if the unit wall thickness is at least 20 mm); exhaust air temperature – from +10 °C to +40 °C; relative air humidity – from 20% to 80%, non-condensing. The ratio of temperature and humidity must not exceed condensation conditions, i.e., condensation must not form on the inner or outer walls of the unit.

3. When starting equipment in new buildings or renovated premises during the autumn-winter season, the exhaust air humidity often exceeds normal operating conditions, and due to dust from construction materials, air filters may become clogged immediately after startup. It is recommended to dry and ventilate the premises before starting the ventilation equipment.

4. The ventilation unit must be periodically inspected (recommended interval – every 4 months): filters and heat exchangers checked for contamination, moving parts and belts checked. Air filters must be replaced at least once per year (recommended twice per year – before and after the heating season).

5. In the case of an extended warranty, periodic inspection of the unit must be performed at least twice a year throughout the entire warranty period, and the results must be recorded. Periodic inspections may only be performed by qualified specialists or a KOMFOVENT representative.

6. It is advisable not to switch off the ventilation unit; when ventilation is not required, reduce the intensity to the minimum.

7. System balancing must be performed before operating the ventilation unit.

KOMFOVENT representative reserves the right to refuse free warranty maintenance services if the following conditions are not met.

WARRANTY CONDITIONS

1. The warranty does not apply in the following cases:
   1.1. If the product usage or operating conditions, as specified in the installation and operating instructions, are violated;
   1.2. If the storage conditions of the unit are violated;
   1.3. If there are signs indicating attempts of unqualified repair;
   1.4. If the unit's construction has been altered;
   1.5. If the unit is used for purposes other than its direct intended use;
   1.6. If the device serial number on the attached plate or sticker has been changed, removed, or is impossible to identify;
   1.7. If the unit is installed not according to the manufacturer's installation instructions, has no space left for maintenance, or is installed in a location difficult to access;
   1.8. For noise, vibration, or colour changes arising from normal wear of the unit or its components.

2. The warranty does not apply to device malfunctions that occur due to:
   2.1. Damage to the unit caused by improper transportation or installation errors;
   2.2. Mechanical damage;
   2.3. Damage caused by foreign objects, materials, liquids, or condensation entering the device, except when this occurs due to a design flaw;
   2.4. Damage resulting from natural disasters, fire, domestic factors, accidental external effects (voltage fluctuations in the electrical network, lightning, etc.), or accidents.

3. Warranty service is not provided in cases where it is necessary to replace operating parts (filters, fuses).

4. Preparatory work required to access the unit and perform quality repairs, such as removal of furniture, walls, partitions, ceilings, ducts, plumbing, equipment from other manufacturers, or other obstructing items, is not considered warranty service. KOMFOVENT representatives have the right to refuse to perform such work.

5. The warranty does not cover additional fluids used in ventilation systems, such as heat exchanger filling fluids, in the event of leakage.

6. The warranty does not cover additional losses attributable to device failure, such as inconvenience, transportation expenses, phone calls and accommodation, personal or business losses, loss of salary or income.

7. KOMFOVENT is not responsible for direct or indirect damage caused by KOMFOVENT products to people, pets, or property if the cause of such damage is failure to comply with the unit's usage and installation rules and conditions, intentional or negligent actions of users or third parties.

Since great attention is paid to product quality, we welcome your feedback, comments, or suggestions regarding the technical and operational properties of the equipment.

APENDIX NO.3

WHERE TO FIND SERIAL NUMBER?

1. On the unit casing

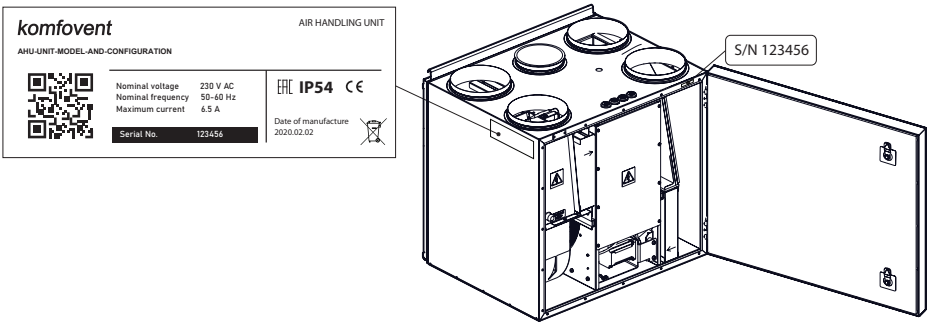

2. In the control panel

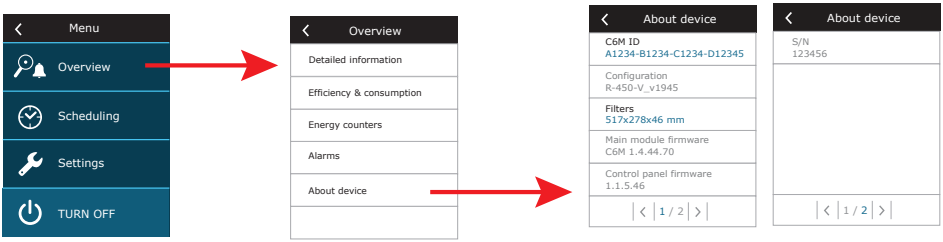

UAB KOMFOVENT we reserve the right to make changes without prior notice

SERVICE AND SUPPORT

LITHUANIA
UAB KOMFOVENT
Phone: +370 5 200 8000
service@komfovent.com
www.komfovent.com

FINLAND
Komfovent Oy
Muuntotie 1 C1
FI-01 510 Vantaa, Finland
Phone: +358 20 730 6190
toimisto@komfovent.com
www.komfovent.com

GERMANY
Komfovent GmbH
Konrad-Zuse-Str. 2,
42551 Velbert, Deutschland
Phone: +49 0 2051 6051180
info@komfovent.de
www.komfovent.de

LATVIA
SIA Komfovent
Bukaišu iela 1, LV-1004 Riga, Latvia
Phone: +371 24 66 4433
info.lv@komfovent.com
www.komfovent.com

SWEDEN
Komfovent AB
Ögärdesvägen 12A
433 30 Partille, Sverige
Phone: +46 31 487 752
info_se@komfovent.com
www.komfovent.se

UNITED KINGDOM
Komfovent Ltd
Unit C1 The Waterfront
Newburn Riverside, Newcastle upon Tyne NE15 8NZ, UK
Phone: 0191 429 4503
info_uk@komfovent.com
www.komfovent.com

PARTNERS

AT	J. PICHLER Gesellschaft m. b. H.	www.pichlerluft.at
BE	Ventilair group	www.ventilairgroup.com
	ACB Airconditioning	www.acbairco.be
CZ	REKUVENT s.r.o.	www.rekuvent.cz
CH	WESCO AG	www.wesco.ch
	SUDCLIMATAIR SA	www.sudclimatair.ch
	CLIMAIR GmbH	www.climair.ch
DK	Øland A/S	www.oeland.dk
EE	BVT Partners	www.bvtpartners.ee
FR	ATIB	www.atib.fr
HR	Microclima	www.microclima.hr
HU	AIRVENT Légtechnikai Zrt.	www.airvent.hu
	Gevent Magyarország Kft.	www.gevent.hu
	Merkapt	www.merkapt.hu
IE	Lindab	www.lindab.ie
IR	Fantech Ventilation Ltd	www.fantech.ie
IS	Blikk & Tækniþjónustan ehf	www.bogt.is
	Hitataekni ehf	www.hitataekni.is
IT	ICARIA	www.icaria.srl
NL	Vent-Axia B.V	www.vent-axia.nl
	DECIPOL-Vortvent	www.vortvent.nl
	ForClima BV	www.forclima.nl
NO	Ventilution AS	www.ventilution.no
	Ventistål AS	www.ventistal.no
	Thermo Control AS	www.thermocontrol.no
PL	Ventia Sp. z o.o.	www.ventia.pl
SE	Nordisk Ventilator AB	www.nordiskventilator.se
SI	Agregat d.o.o	www.agregat.si
SK	TZB produkt, s.r.o.	www.tzbprodukt.sk
UA	TD VECON LLC	www.vecon.ua